Image courtesy of LeisureCat

HYDRAULIC STEERING

Introduction to Hydraulic Steering	760
Outboard Hydraulic Steering Selection Guide	761
BayStar™ Cylinder Range	761
SeaStar® Cylinder Range	762
Optimus EPS and 360 Selection Guide	763
Optimus EPS and 360 Cylinder Range	763
BayStar™ Compact Outboard Steering	764
BayStar™ Side Mount Outboard Steering	766
BayStar™ Inboard Steering	767
SeaStar® Hydraulic Steering	768
SeaStar® Outboard Steering Kits	769
SeaStar® Front Mount Outboard Steering	770
SeaStar® Side Mount Outboard Steering	773
SeaStar® Pro Hydraulic Steering	775
SeaStar® Front Mount Twin Outboard Steering	777
SeaStar® Tournament Series Cylinder	778
SeaStar® NFB Front Mount Triple Outboard	780
SeaStar® Outboard, Catamaran and Splashwell Systems	781-783
SeaStar® Stern Drive Hydraulic Steering	784
SeaStar® Inboard Hydraulic Steering	786
Caplilano™ Hydraulic Steering Systems	788
SeaStar® Hydraulic DC Power Steering	791
SeaStar® Power Steering for Boats 30m+	792
SeaStar® Solutions Optimus EPS	794
Electronic Power Steering System	795
Optimus EPS & 360 Key Components	796
Optimus EPS - Single Engine	798
Optimus EPS - Twin	800
Optimus 360 Joystick Control System	802-802
SeaStar® SeaStation GPS	803-804
Optimus EPS - Stern drive / Inboard	805
Optimus EPS - Big Boat	806
Optimus EPS & 360 Selection Guide Chart	808
SeaStar® Power Assist	810
SeaStar® SmartStick	811
SeaStar® Solutions Helms	812
SeaStar® Hydraulic Oil	814
Cylinder Capacities	815
SeaStar® Solutions Fittings and Kits	816
Hoses and Fittings	819
SeaStar® Hydraulic Service Kits	821
SeaStar® Hydraulic Plumbing Diagrams	822

CONTACT BLA SALES SPECIAL ORDER 1300 252 725

A blue product code or the appearance of this logo indicates the product requires special ordering. Please contact BLA on **1300 252 725** for information on these products.

BLA boatinglifestyleadventure

Introduction to Hydraulic Steering

SEASTAR SOLUTIONS

What is hydraulic steering and how does it work?

Hydraulic steering is a method of steering that uses oil to transmit force from the steering wheel to the outboard motor or rudder via flexible hoses. Hydraulic steering systems are relatively exempt of frictional loads from engine torque and similar. as most of the moving parts are running on ball bearings and in oil. This makes them more efficient, reliable and they require less maintenance than mechanical cable type steering.

Turning the wheel pumps fluid from the helm through the hoses and into the cylinder, moving the cylinder ram which in turn moves the engine through its steering arc.

At the heart of all SeaStar Solutions® hydraulic steering systems lies the helm pump. SeaStar Solutions® helm pumps are axial piston pumps specifically designed for manual hydraulic steering and all models feature an integral lock valve which prevents the steering load from feeding back to the wheel. The lock valve will not allow the rudder or drive unit to move until you open it by moving the steering wheel. It also incorporates a relief valve that provides over-pressure protection for the system components.

SeaStar Solutions® has a hydraulic cylinder to suit most steering applications with all cylinders being supplied with dual end seals, anodised aluminium or brass barrels and chrome plated or polished stainless steel shafts for minimal friction and maximum seal life.

Key Hydraulic Steering Systems

BAYSTAR™	SEASTAR™
CAPILANO™	SEASTAR PRO™
SEASTAR P/A™	SEASTAR™ DC POWER STEERING

What is Optimus Electronic Power Steering (EPS)?

Optimus EPS truly raises the bar when it comes to comfort, control and manoeuvrability, especially for the new breed of high performance powerboats, saltwater fishing vessels, catamarans, RIBS and high end pontoon boats. It's unlike anything you've ever experienced when it comes to steering. We know you will be impressed. See page 794 for more product information.

Advantages:

- No oil at helm
- Boat that steers like a sports car
- Plug and play autopilot compatibility
- No autopilot pump or rudder feedback unit
- Adjustable speed sensitive turns lock-to-lock
- Adjustable speed sensitive wheel effort
- Can be retro-fitted to existing mechanical and electronic controlled engines. You do not have to buy new engines
- No tie bars (twin configuration)
- No liquid tie bar (CAT)
- On demand pumps which extend battery life
- Components based on existing SeaStar reliability and quality
- NMEA 2000 Certified

Key Electronic Power Steering Systems

OPTIMUS EPS BY SEASTAR	OPTIMUS 360 BY SEASTAR

Outboard Hydraulic Steering Selection Guide

SEASTAR SOLUTIONS

		HP						
SYSTEM		75	115	150	200	250	300	300+
BayStar	Optimum							
	***Maximum							
SeaStar	Optimum							
	Maximum							
SeaStar Pro**	Optimum							
	Maximum							
SeaStar Power Assist	Optimum							
	Maximum							
SeaStar Power Assist Pro**	Optimum							
	Maximum							

N.B: Chart based on "optimum comfort".
***** Ideal for bass boats that exceed 60mph.***
****** High performance engines should use SeaStar Steering***

BAYSTAR™

BAYSTAR Outboard Hydraulic Steering

Available in front mount to suit most single outboard driven vessels up to 150HP. All models mount via the engine tilt tube and are supplied in kit form with all the necessary components to complete the installation. There are four models of front mount cylinders ensuring a perfect fit to most motors. Refer page 764 for specific details.

BAYSTAR Side Mount

This cylinder is suitable for installation in shallow splashwells and use on engines rated to 150HP. Refer to page 766 for specific details.

BAYSTAR Inboard Hydraulic Steering

Trunnion mounted inboard cylinder designed for use in relatively low torque applications - typically low speed displacement vessels. Supplied in kit form with all the necessary components to complete the installation. Refer page 767 for specific details.

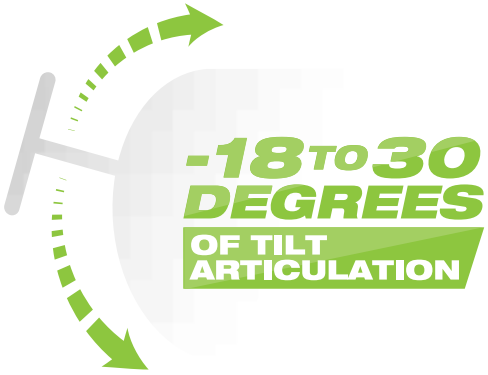

SEASTAR™

SEASTAR SOLUTIONS

SeaStar Range

SEASTAR Outboard Hydraulic Steering

Available in front mount, side mount, centre mount and splashwell mount configurations to suit most single and twin outboard driven vessels up to 600HP. Mounting is via the engine tilt tube (bracket mount on splashwell and centre mount) and all models are supplied in kit form with all the necessary components to complete the installation. There are four models of front mount cylinders, ensuring a perfect fit to most outboards. Refer from page 770 for specific details.

291003

SEASTAR Outboard Pro Hydraulic Steering

Available in front mount configuration only to suit most single outboard driven vessels up to 300HP*. Specifically designed for high speed, top-end performance vessels. Mounting is via the engine tilt tube and there is a choice of standard or PRO cylinders. Refer page 776 for specific details.

Four stroke engines that have a larger percentage of the motor overhanging the steering arm and spin larger diameter props may be heavier to steer.

291018/20

SEASTAR Outboard Tournament Hydraulic Steering

The Tournament tiebar series cylinders are recommended for serious offshore use and suited to high horsepower, multi-engine applications. Designed for extreme conditions with a massive one inch stainless steel integral tie bar and heavy duty pivot plate. Available in port, starboard or centre configuration to suit most dual and triple applications. Refer page 778 for specific details.

Picture of 291050 consists of 291222 Hardware Kit.

291050

291210

SEASTAR Inboard Hydraulic Steering

Large range of trunnion mounted inboard cylinders suitable for use in applications as varied as jet driven vessels to 15 metre twin engine planning vessels. Most cylinders are supplied in kit form, but as with all SeaStar Solutions steering, the components are available separately. Refer page 786 for specific details.

291060/62/64/66/68

SEASTAR Stern Drive Hydraulic Steering

A range of cylinders is available, specifically designed to suit the engine manufacturer's steering mounts on most models of stern drives. Supplied in kit form with all the necessary components to complete the installation. Refer page 784 for specific details.

CAPILANO Inboard Hydraulic Steering

Trunnion mounted inboard cylinders suitable for use on vessels up to 18 metres. Supplied in kit form with all the necessary components to complete the installation except for the copper tubing. Refer to page 788 for specific details.

294032/38

SEASTAR Power Steering

Suitable for use on vessels up to 30 metres, the SeaStar® hydraulic power steering systems use the vessels engine to provide the power for the steering system via a motor driven hydraulic pump. Manual hydraulic steering is also incorporated into the system to provide steering when engines are not running. SeaStar® power steering is not supplied in kit form as most vessels have different requirements. Refer to page 793 for specific details.

295002

SEASTAR Hydraulic DC Power Steering System

Developed for use in today's large, high powered luxury vessels and commercial craft where ease of operation and reliability are paramount. SeaStar® Power Steering Systems provide the ultimate in simplicity, safety, reliability and performance. Refer to page 791 for specific details.

295102

Optimus EPS & 360 Selection Guide

SEASTAR SOLUTIONS

OPTIMUS EPS SYSTEM			
	Boat Size ft		
	40	70	70+
Outboard Hydraulic Steering			
Inboard & Sterndrive Hydraulic Steering			
Inboard Hydraulic Steering			

OPTIMUS 360 SYSTEM			
	Engine Applications		
	Twin	Triple	Quad
Hydraulic Steering			

OPTIMUS EPS BY SEASTAR

ELECTRONIC POWER YOU CAN FEEL

OPTIMUS EPS WHEEL TURNS FULLY PROGRAMMABLE 3.5 — 8.5

OPTIMUS EPS Outboard Electronic Steering

Steering (EPS) for single, twin, triple and quad outboard engine boats, and also single and dual helm station boats. Optimus EPS truly raises the bar when it comes to comfort, control and maneuverability, especially for the new breed of high performance powerboats, saltwater fishing vessels, catamarans. The electronics provide the very best in performance with car-like feel for effortless and comfortable control steering at speed or under extreme conditions while lightening the steering load during low speed manoeuvres.

292160

OPTIMUS EPS Inboard & Sterndrive Electronic Steering - Applications Under 40ft

Available for both retro-fit and new engine installations. Suits most single and twin inboard and sterndrive engine boats, both electronic and mechanical controlled up to 40ft. Also suits single and twin helm station vessels. Lock-to-lock turns and wheel effort are programmed to change with engine RPM. At slow speeds, Optimus EPS can be set to reduce the number of turns lock-to-lock, for example 4 and make it easier to steer. When you're negotiating through traffic or in a tight spot, those smaller moves of the wheel give you precise control. When you're running at speed in open water, Optimus EPS can be set to increase lock-to-lock turns, and increase steering effort giving the driver more stability to comfortably keep on course.

292180
Inboard

292182
Sterndrive

OPTIMUS EPS Inboard Electronic Steering

- Applications 40-70ft

Available for both retro-fit and new engine installations. Suits most single and twin inboard engine boats, both electronic and mechanical controlled up from 40ft-70ft. Also suits single, twin and triple helm station yachts. Lock-to-lock turns and wheel effort are programmed to change with engine RPM. At slow speeds, Optimus EPS can be set to reduce the number of turns lock-to-lock, for example 4 and make it easier to steer. When you're negotiating through traffic or in a tight spot, those smaller moves of the wheel give you precise control. When you're running at speed in open water, Optimus EPS can be set to increase lock-to-lock turns, for example, and increase steering effort giving the driver more stability to comfortably keep on course. And through it all, Optimus EPS does the work, so you can relax and take it easy.

292176
Inboard

OPTIMUS 360 Electronic Steering

A revolutionary joystick steering/shift/throttle control system engineered for powerboats with mechanically-controlled twin outboards and select electronic controlled twin, triple and quad outboard engines. Optimus 360 uses state-of-the-art electronics to provide easy 360 degree manoeuvring capabilities when docking, negotiating crowded areas or by loading a vessel onto a trailer. Refer to page 802 for specific details.

BayStar Compact Outboard Steering

BayStar™ Plus outboard hydraulic steering has been developed by SeaStar Solutions® to suit most single outboard driven vessels up to 150HP*. For applications that exceed BayStar's HP rating please purchase one of our SeaStar® products.

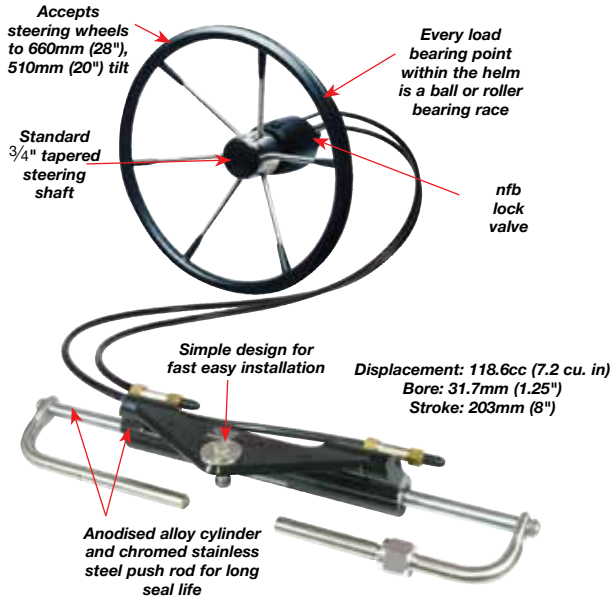

Features:

- Patented No FeedBack™ steering lock valves
- Super low friction helm for smooth comfortable steering
- 5.2 turns lock to lock
- Balanced design that fits most splashwells provides full engine movement
- Cylinders to suit most outboards

** Not recommended for Mercury 150HP Optimax DFI*

Three easy steps to order your BayStar™ Steering kit:

1. Check helm dimensions: Front Mount Hydraulic Helm

- Used with both front and side mount cylinders
- Easily installed to your existing console to create a professional finish
- Easy front of console filling point for hydraulic oil
- Simple purging process

2. Check cylinder dimensions: Front Mount Cylinder

- This compact unit fits narrow splashwells with only 534mm width required
- The steering cylinder is protected in the splashwell
- One common cylinder fits most outboards to 150HP
- Fits to outboard tilt tube

3. Splashwell:

Is there enough room in the splashwell for full engine tilt? Check your dimensions (A, B & C) and ensure that they are the same or more than what is listed.

Helm Dimensions

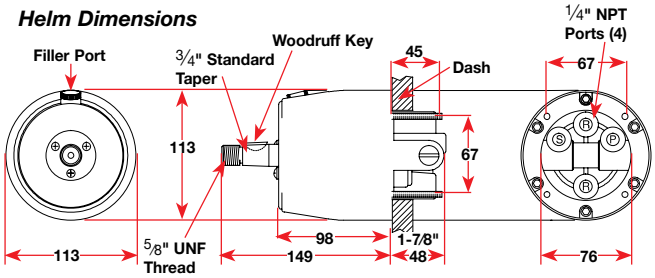

Cylinder Dimensions

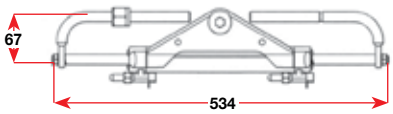

Displacement: 118.2cc (7.7 cu. in)

Single engine splashwell minimum dimensions

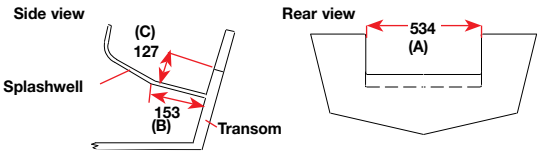

Maximum transom thickness 76mm

Engine Application Guide

Cylinder BLA Code	Make	Year	Capacity	Notes
291071	Force	1985 to date	90–150HP	
291071	Honda	1992 to date	30–90HP	
291073		1998 – 2010	115–130HP	
291071		2001 to date	150HP	
291071		2003 to date	BF135HP	
291071		2010 to date	115–150HP	
291074	Johnson / Evinrude	1977 – 1990	65–150HP	
291071		1991 to date	40–150HP	
291074		1997 to date	115HP Ficht	4, 5
291071		1997 to date	75–150HP Ficht	
291074		1998 to date	40–140HP 4-Stroke	1, 4
291071	Mercury/ Mariner	1984 to date	75–150HP	
291071	Nissan	1990 to date	120–140HP	
291071	Suzuki	1986 to date	150HP	
		1996 only	115–140HP	
291071		1987 – 2002*	115–140HP	1
291071		1990 – 2000	90–100HP	
291071		1998 to date	40–70 4-Stroke	1
291075		2001 to date	115–140HP 4-Stroke	1, 4
291071	Tohatsu	1990 to date	40–140HP	
291071	Yamaha	1998 to date	40–50HP	2
291071		1998 to date	60HP	3
291071		1986 to date	70–90HP	1
291071		1997 to date	80–150HP 4-Stroke	
291074		2000 to date	25–60HP 4-Stroke	1
291074		2010 to date	70HP 4-Stroke	
291075		1997 – 2013	115A 4-Stroke	
291071		2014 to date	115B 4-Stroke	
291071	Yanmar	1990 to date	27–36HP	

Notes

1. Requires spacer kit 293690 (HO5090).
2. Engine clamp brackets must be cut or ground, and the engine through bolted onto the transom, or interference will occur, restricting engine trim and tilt.
3. Steering hook Yamaha Part #63D-48511-00-4D required.
4. Cylinder 291071 may be used in these applications. The pivot plate will need to be flipped before installation.
5. Johnson 115HP 2-stroke engines require the pivot plate to be flipped. See Note 4.

** Not suitable for 115-140HP. Suzuki motors manufactured in 1996 only*
N.B. BayStar™ Plus is not recommended for Mercury 150HP Optimax DFI

BayStar Steering Kit - Semi Rigid Nylon Hose

BAYSTAR™

Supplied in kit form with all the components required to complete your installation.

Kits Includes:

- BayStar™ helm pump standard **291490** or tilt helm **291492**
- BayStar™ front mount cylinder to suit engine – refer below
- 15m **292997** semi-rigid nylon hose kit
- 4 x **293610** nut and olive kit
- 1 x **291898** filler kit
- 2 x **291902** 1 litre SeaStar Solutions® oil

BLA Code	Description	Helm Type	Helm	Cylinder Part No.	SeaStar Solutions® Cylinder Code
291560	BayStar™	Std	**291490**	**291071**	HC4645H
291574	BayStar™	Tilt	**291492**	**291071**	HC4645H
291562	BayStar™	Std	**291490**	**291073**	HC4647H
291564	BayStar™	Std	**291490**	**291074**	HC4648H
291566	BayStar™	Std	**291490**	**291075**	HC4658H

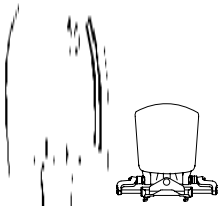

Single Engine
(Single cylinder)
Applications up to 150HP maximum
Number of turns - 5.5 Balanced

Refer to the engine application guide for the correct engine cylinder model on page 764.

BayStar Steering Kit - Front Mount Standard Outboard Hose

BAYSTAR™

Kits comprise of 1 x **291490** helm, 1 x **29107X** cylinder, 2 x **291902** hydraulic oil and 2 x **2930XX** outboard hoses.

291490

291071

291902

2930XX

BLA Code	Cylinder Part No.	Hose Length ft	BLA Code	Cylinder Part No.	Hose Length ft	BLA Code	Cylinder Part No.	Hose Length ft	BLA Code	Cylinder Part No.	Hose Length ft
290010	**291071**	10	**290110**	**291073**	10	**290210**	**291074**	10	**290310**	**291075**	10
290011	**291071**	11	**290111**	**291073**	11	**290211**	**291074**	11	**290311**	**291075**	11
290012	**291071**	12	**290112**	**291073**	12	**290212**	**291074**	12	**290312**	**291075**	12
290013	**291071**	13	**290113**	**291073**	13	**290213**	**291074**	13	**290313**	**291075**	13
290014	**291071**	14	**290114**	**291073**	14	**290214**	**291074**	14	**290314**	**291075**	14
290015	**291071**	15	**290115**	**291073**	15	**290215**	**291074**	15	**290315**	**291075**	15
290016	**291071**	16	**290116**	**291073**	16	**290216**	**291074**	16	**290316**	**291075**	16
290017	**291071**	17	**290117**	**291073**	17	**290217**	**291074**	17	**290317**	**291075**	17
290018	**291071**	18	**290118**	**291073**	18	**290218**	**291074**	18	**290318**	**291075**	18
290019	**291071**	19	**290119**	**291073**	19	**290219**	**291074**	19	**290319**	**291075**	19
290020	**291071**	20	**290120**	**291073**	20	**290220**	**291074**	20	**290320**	**291075**	20

BayStar Steering Kit - Front Mount Bulkhead Hose

BAYSTAR™

Kits comprise of 1 x **291490** helm, 1 x **29107X** cylinder, 2 x **291902** hydraulic oil and 2 x **2933XX** bulkhead hoses.

BLA Code	Cylinder Part No.	Hose Length ft	BLA Code	Cylinder Part No.	Hose Length ft	BLA Code	Cylinder Part No.	Hose Length ft	BLA Code	Cylinder Part No.	Hose Length ft
290060	**291071**	10	**290160**	**291073**	10	**290260**	**291074**	10	**290360**	**291075**	10
290061	**291071**	11	**290161**	**291073**	11	**290261**	**291074**	11	**290361**	**291075**	11
290062	**291071**	12	**290162**	**291073**	12	**290262**	**291074**	12	**290362**	**291075**	12
290063	**291071**	13	**290163**	**291073**	13	**290263**	**291074**	13	**290363**	**291075**	13
290064	**291071**	14	**290164**	**291073**	14	**290264**	**291074**	14	**290364**	**291075**	14
290065	**291071**	15	**290165**	**291073**	15	**290265**	**291074**	15	**290365**	**291075**	15
290066	**291071**	16	**290166**	**291073**	16	**290266**	**291074**	16	**290366**	**291075**	16
290067	**291071**	17	**290167**	**291073**	17	**290267**	**291074**	17	**290367**	**291075**	17
290068	**291071**	18	**290168**	**291073**	18	**290268**	**291074**	18	**290368**	**291075**	18
290069	**291071**	19	**290169**	**291073**	19	**290269**	**291074**	19	**290369**	**291075**	19
290070	**291071**	20	**290170**	**291073**	20	**290270**	**291074**	20	**290370**	**291075**	20

BayStar Steering Kit - Adjustable Outboard Hose

BAYSTAR™

Complete BayStar™ steering kit (**291561**) providing the flexibility to enable the installer the ability to make whatever hydraulic hose length required, without the need for specialist swaged fittings. The two unique re-usable brass end fittings allow the installer to simply cut the hose to length and insert the brass connectors. Complete kit includes 50 foot length of outboard hose, BayStar™ helm, BayStar™ front mount cylinder, hydraulic oil, rubber boot and two re-usable hose fittings. Please refer to page 764 for cylinder application guide.

BLA Code	Kit Inclusions	Cat Ref. Page
291561	1 x **291071** Cylinder front mount	764
	1 x **291490** Helm - BayStar™ 1.4	812
	2 x **291902** 1 litre SeaStar Solutions® oil	814
	1 x **293050** 50 foot outboard hose	819
	2 x **297332** Re-usable hose fitting	820
	1 x **293001** Rubber boot	N/A

Side Mount Outboard Steering

SEASTAR SOLUTIONS®

BayStar Side Mount Steering System

BAYSTAR™

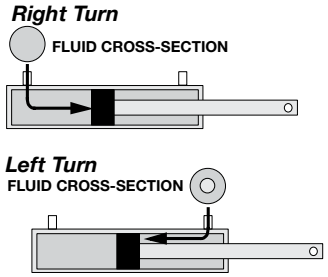

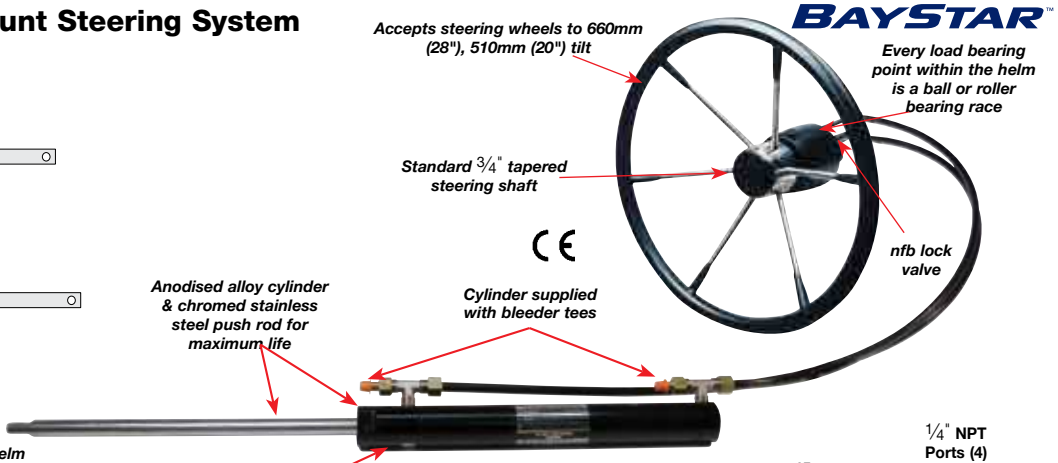

Unbalanced Cylinder - Side View

N.B. Unbalanced cylinders have unequal wheel turns. When the helm is turned one turn, a certain volume of fluid is pumped into the cylinder. On one side of an unbalanced cylinder piston is the push rod, which reduces the effective cylinder volume. The cylinder area on the other side of the piston has no push rod. The rod side of the piston will move faster per turn of the wheel because less space is available for fluid than on the side with no rod. Always bleed unbalanced cylinders fully retracted.

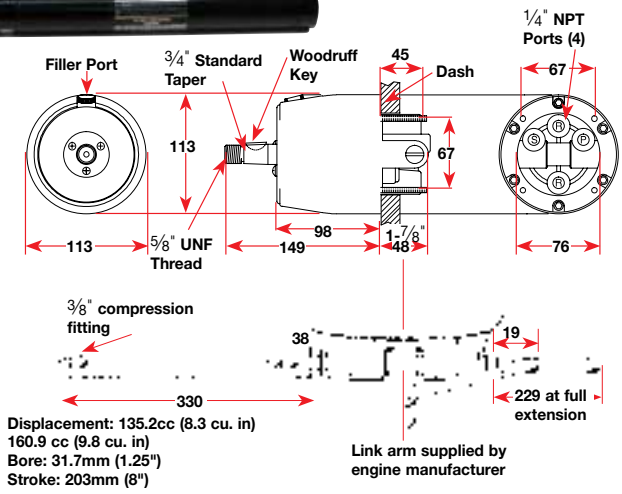

Features:

- The simplest of hydraulic installations
- One common cylinder fits most engines
- Convenient tilt tube mounting as per ABYC/NMMA/BIA standards
- Anodised alloy cylinder for reduced friction and longer seal life
- Chromed stainless steel push rod for extended seal life
- Patented No Feedback™ steering lock valves
- 5.9 turns lock to lock

Kits Include:

- BayStar™ helm pump standard **291490** or tilt helm **291492**
- BayStar™ side mount cylinder **291072**
- 15m **292997** semi rigid nylon hose kit
- 4 x **293610** nut and olive kit
- 2 x **291902** 1 litre SeaStar Solutions® oil

BLA Code	Description
291570	BayStar™ side mount steering system - standard helm
291578	BayStar™ side mount steering system - tilt helm

BayStar Steering Kit - Side Mount Outboard Hose

Kits comprise of 1 x **291490** helm, 1 x **291072** cylinder, 2 x **291902** hydraulic oil and a choice of either 2 x standard outboard hoses, **2930XX** or 2 x thru bulkhead outboard hoses, **2933XX**.

BLA Code	Hose Type	Hose Length ft	BLA Code	Hose Type	Hose Length ft
290410	Std	10	**290460**	Bulkhead	10
290411	Std	11	**290461**	Bulkhead	11
290412	Std	12	**290462**	Bulkhead	12
290413	Std	13	**290463**	Bulkhead	13
290414	Std	14	**290464**	Bulkhead	14
290415	Std	15	**290465**	Bulkhead	15
290416	Std	16	**290466**	Bulkhead	16
290417	Std	17	**290467**	Bulkhead	17
290418	Std	18	**290468**	Bulkhead	18
290419	Std	19	**290469**	Bulkhead	19
290420	Std	20	**290470**	Bulkhead	20

Inboard Hydraulic Steering

SEASTAR SOLUTIONS®

BAYSTAR™

BayStar Inboard Hydraulic Steering System

BayStar™ inboard hydraulic steering has been developed by SeaStar Solutions® for use in relatively **low torque applications - typically low speed** displacement vessels. For applications that exceed BayStar's torque rating please purchase one of our SeaStar® products.

Features:

- Anodised alloy cylinder and mount
- Compact helm
- 4.6 turns lock to lock
- Cylinder torque 52kg/m (4514in/lb)
- 15.9cm (6.25") stroke
- Balanced cylinder
- Adjustable O-ring sealed ports

291490

Kits Include:

- 1 x BayStar™ helm pump standard **291490** or tilt helm **291492**
- 1 x BayStar™ inboard cylinder **291077**
- 15m **292997** semi rigid nylon hose kit
- 4 x **293610** nut and olive kit
- 1 x **291898** filler kit
- 2 x **291902** 1 litre SeaStar Solutions® oil

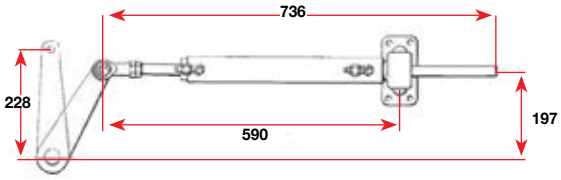

BLA Code	Description
291572	BayStar™ inboard steering system - standard helm
291579	BayStar™ inboard steering system - tilt helm

BayStar Front Helm Pumps

BAYSTAR™

Features:

- Satin black baked enamel finish over anodising
- Maximum steering wheel diameter is 660mm
- Small 76mm hole cut out in dash
- Available in two capacities
- Tilt helm option
- Convenient front of dash fill
- Complete with 2 elbow fittings, 2 nuts and olives

291490

291492

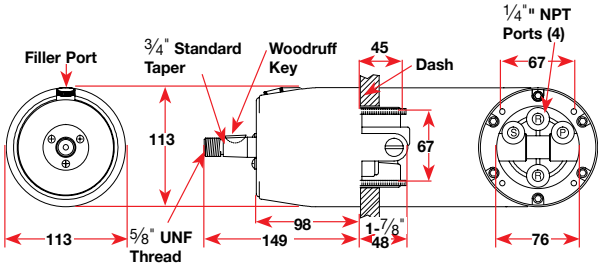

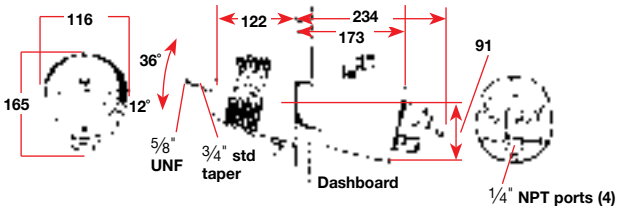

BLA Code	Description	Displacement		Relief Valve Setting	
		cc	cu in	bar	psi
291490	1.4 - front mount	22.9	1.4	70	1000
291492	1.4 - tilt	22.9	1.4	70	1000

BayStar Hydraulic Service Kits

BAYSTAR™

BLA Code	SeaStar Solutions® Part No.	Description
293738	HS5147	Seal kit to suit HH4016 (**291500**) and HH14015 (**291501**) helms
293742	HS5176	Seal kit to suit HH4314 (**291490**) and HH4315 (**291492**) helms
293745	HS5161	Seal kit to suit HH5217 (**291503**) helm
293716	HS5153	Seal kit to suit HC4670H (**291072**) cylinder
293713	HP4600	Seal kit to suit HC4645H (**291071**), HC4647H (**291073**), HC4648H (**291074**) & HC4658H (**291075**) cylinders
293720	HS5154	Seal kit to suit HC4460H (**291077**) cylinder
293718	HP5607	Port side seal kit to suit HC4600H (**291070**) obsolete cylinder
293719	HP5608	Starboard seal kit to suit HC4600H (**291070**) obsolete cylinder
293631	HF4202	Bleed 'T' for BayStar™ cylinder (pk 2)

SeaStar® Hydraulic Steering

SeaStar® Steering Systems are totally self-contained, non power-assisted units that make steering a boat a truly enjoyable experience. Their super-efficient hydraulic operation produces an effect most people equate with "power steering". With a compact helm, two hoses and a cylinder, a SeaStar® system fits easily into the same space as a mechanical system.

The SeaStar® Hydraulic System

Easy to install (only three components):

- Helm
- Cylinder
- Tube or hose

Compact and attractive helm design. Variety of helm mounting configurations. Simple tube/hose fitting connections. Clear, concise installation instructions.

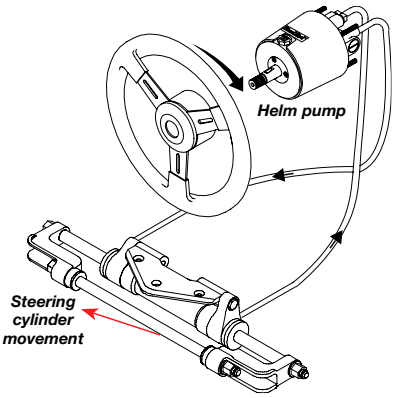

Easy to fill and purge:

- Engineered bleed fittings on the cylinders
- A helm and lock valve design that enhances air removal
- A no mess filler device
- Filling and purging time of normally less than 30 minutes

Features:

- Heavy duty bearings instead of bushings
- All metal construction. All exposed components are either stainless steel, marine grade anodised aluminium or brass
- Field replaceable helm and cylinder shaft seals
- Anti-friction piston points
- A no hassle warranty - two years for recreational use - one year for commercial use

Selecting the System

The objective is to match the steering cylinder to the requirements of the vessel. This depends on four factors:

1. Type of vessel - sail or powerboat, planing or displacement
2. Type of propulsion system of the vessel (i.e. inboard, outboard, stern drive, etc.)
3. The number of engines or rudders
4. The total power of the engine(s)

Once the cylinder has been selected, the helm pump(s) can be determined.

Helm selection depends on three factors:

1. Number of turns required
2. The number of steering stations
3. Helm configuration (i.e. standard, back mount or tilt helm)

No other manual hydraulic steering system gets you closer to power steering than SeaStar®

The Helm Pump

The SeaStar® helm is an axial piston pump specifically designed for manual hydraulic steering. Every load bearing point within the helm pump runs on either a roller or ball bearing race for super low friction and smooth positive steering. It has a built in lock valve to prevent the steering load from feeding back to the driver. The lock valve will not allow the rudder or drive unit to move until you open it by moving the steering wheel. The lock valve section of the helm also includes a relief valve. This relief valve provides over-pressure protection for mechanical components, hydraulic hoses and fittings.

For enhanced driver visibility and comfort both standing and seated, SeaStar® offer the five position, height adjustable tilt helm. Tilt helms are available for all outboard, stern drive and inboard SeaStar® systems.

The Cylinder

The SeaStar® system has a cylinder for most steering applications. With reliability being paramount in SeaStar's design concept, all steering cylinders feature dual end seals, anodised aluminium or brass barrels and chrome plated stainless steel shafts for minimal friction and maximum seal life

Hose & Connections

Required to provide a path for the fluid to flow under pressure from the helm pump to the cylinder. It is recommended to only use hydraulic oil supplied specifically for SeaStar®.
Refer page 814.

Outboard Hose

Semi Rigid Tube

EASY TO INSTALL
ONLY THREE COMPONENTS HELM, CYLINDER, TUBE OR HOSE

Outboard Steering Kits

SEASTAR SOLUTIONS®

SEASTAR™

SeaStar Standard Steering System Kits

- Front Mount

Single Outboard - 4.9 Turns

BLA Code	Inclusions
291600	1 x **291003** Front mount cylinder 1 x **291502** 1.7 front mount helm 1 x **292997** 15m nylon semi rigid tube 4 x **293610** Nut & olive kit 3 x **291902** 1 litre SeaStar Solutions® oil

Twin Outboard, Twin Cylinder - 4.9 Turns

BLA Code	Inclusions
291602	2 x **291003** Front mount cylinder 1 x **291502** 1.7 front mount helm 1 x **292997** 15m nylon semi rigid tube 4 x **293002** 600mm outboard hoses 4 x **291902** 1 litre SeaStar Solutions® oil 2 x **293632** Synchronisation valves 2 x **293610** Nut and olive kit

Refer page 771 for details

SeaStar Steering System Kits

- Front Mount, Thru Bulkhead

Single Outboard - 4.9 Turns

Inclusions:

1 x **291003** Front mount cylinder
1 x **291502** 1.7 front mount helm
1 x **292997** 15m nylon semi rigid tube
2 x **2930XX** Outboard hoses
1 x **293630** Bulkhead fitting kit
4 x **293610** Nut & olive kit
3 x **291902** 1 litre SeaStar® oil

BLA Code	Outboard Hose Length mm	ft
291592	610	2
291593	915	3
291594	1220	4

Refer page 770 for details

SeaStar Pro Steering System Kits

- Front Mount

Single Outboard - 4.9 Turns

Inclusions:

1 x **291003** Front mount cylinder
1 x **291540** 2.0 front mount Pro helm
2 x **2931XX** Pro hoses
3 x **291902** 1 litre SeaStar® oil

BLA Code	Description
291814	Pro front mount steering kit 14ft hoses
291816	Pro front mount steering kit 16ft hoses
291818	Pro front mount steering kit 18ft hoses
291820	Pro front mount steering kit 20ft hoses
291824	Pro front mount steering kit 24ft hoses

Refer page 770 for details

SeaStar Adjustable Outboard Hose Kits

Not sure of the hose length required to install your hydraulics into your vessel? BLA has made available the most popular kit to now include a 50 foot length of hose and 2 x re-usable fittings. Simply cut the hose to length and apply fittings.

BLA Code	Description
291601	1 x **291003** Cylinder front mount 1 x **291502** Helm - SeaStar 1.7 3 x **291902** 1 litre SeaStar Solutions Oil 1 x **293050** 50 foot outboard hose 2 x **297332** Reusable hose fitting 1 x **293001** Rubber boot

BLA Code	Description
291604	1 x **291016** Cylinder front mount 1 x **291502** Helm - SeaStar 1.7 3 x **291902** 1 litre SeaStar Solutions Oil 1 x **293050** 50 foot outboard hose 2 x **297332** Reusable hose fitting 1 x **293001** Rubber boot

BLA Code	Description
291640	1 x **291012** Cylinder front mount 1 x **291502** Helm - SeaStar 1.7 3 x **291902** 1 litre SeaStar Solutions Oil 1 x **293050** 50 foot outboard hose 2 x **297332** Reusable hose fitting 1 x **293001** Rubber boot

SeaStar Steering System Kits

- Side Mount

Single Outboard - 4.9 Turns

BLA Code	Inclusions
291610	1 x **291010** Side mount cylinder 1 x **291502** 1.7 front mount helm 1 x **292997** 15m nylon semi rigid tube 4 x **293610** Nut & olive kit 3 x **291902** 1 litre SeaStar Solutions® oil

SeaStar Steering System Kits - Catamaran

Single Outboard - 5.5/6.5 Turns

BLA Code	Inclusions
291608	1 x **291006** Tandem mount cylinder 1 x **291502** 1.7 front mount helm 1 x **292997** 15m nylon semi rigid tube 4 x **293610** Nut & olive kit 3 x **291902** 1 litre SeaStar Solutions® oil

Refer page 782 for details.
N.B. This system is recommended for OEM installation only.

Front Mount Outboard Steering

SEASTAR SOLUTIONS®

SEASTAR™

SeaStar Outboard Steering System - Front Mount

Performance: This pivoting cylinder from SeaStar® offers the incredible steering ease and reliability that puts SeaStar® cylinders way ahead of the competition. Throughout the steering arc there simply isn't anything that feels better to drive!

Simplicity: Integral bleeders and few components make installation a snap. Less moving parts and improved seals boost durability and reduce maintenance.

Reliability: SeaStar® took it's previous cylinder's outstanding design to the next level, improving seals, bearings, fittings and corrosion protection.

Features:

- 20% less effort at hard-over than competitive systems
- Rigid tilt tube mount for no-compromise performance
- Unique pivoting tiller connection allows full engine articulation with independent tilt and trim on twin engines
- Ultra corrosion resistant construction. Painted components are anodised before coating for extra protection
- Small footprint fits virtually all splashwells
- Meets ABYC standards/NMMA requirements

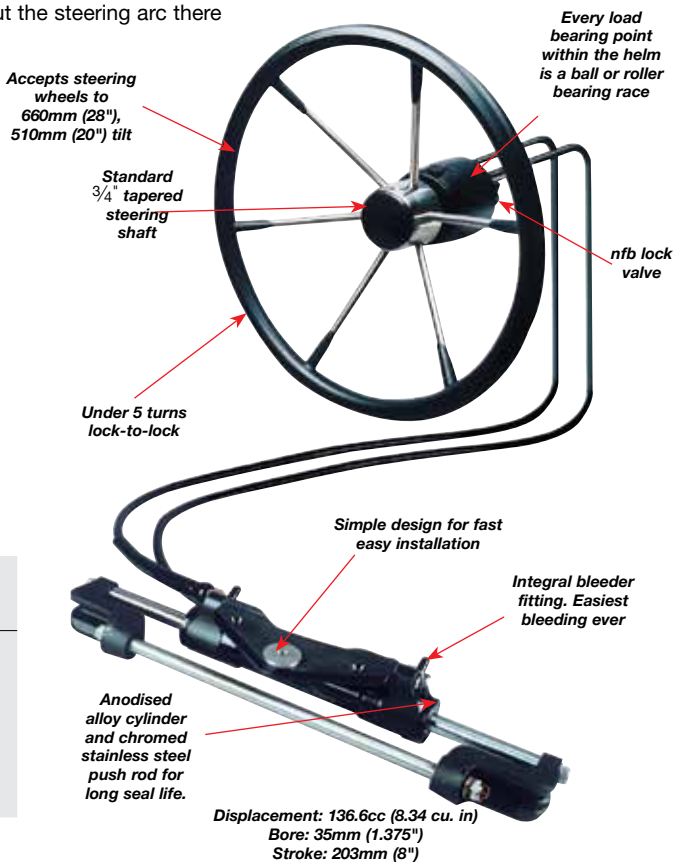

BLA Code	Description	SeaStar Solutions® Code
291003	Front mount cylinder - standard	HC5345-3
291004	Front mount cylinder - short stroke	HC5445-3
291012	Front mount cylinder - 1977-90 OMC	HC5348-3
291014	Front mount cylinder - 115-130HP Honda	HC5347-3
291016	Front mount cylinder - Yamaha	HC5358-3
291017	Front mount cylinder - Yamaha HD (suits Catamaran fluid link apps.)	HC5375-3

Engine Application Guide

Cylinder BLA Code	Make	Year	Capacity	Notes
291003	Force	1985 to date	90-150HP	
291003	Honda	1996 to date	75-90HP	
291014		1998 - 2009	115-130HP	
291003		1998 to date	30-50HP	1
291004		2001 to date	BF200-250	
291003		2003 to date	BF135HP	
291003		2010 to date	115HP	
291012	Johnson / Evinrude	1977 - 1990	65-300HP	
291003		1991 to date	40-300HP	Inc. ETech
291003		1996 to date	75-250HP Ficht	
291016		1998 to date	40-140HP 4-Stroke	1
291016		2000 to date	115HP Ficht	1
291003		2002 to date	200-225HP 4-Stroke	
291003		2007 to date	3.3L/3.4L 200-250HP	Inc. H.O. Models
291003	Mercury	1984 - 1994	2.4/2.5HP EFI	2
291003		1989 to date	75-300HP	
291003		1998 to date	30-60HP	1
291003		2003 to date	115-300HP XS	3
291003		2004 to date	150-200HP Verado	4, 5
291003	Nissan	1990 to date	90-140HP	
291003	Suzuki	1986 to date	100HP	
291003		1986 - 2002	115-140HP	Not 1996
291003		1986 to date	150-300HP 2 & 4 Stroke	
291012		1996 only	115-140HP	
291016		1998 to date	40-140HP 4-Stroke	1
291003	Yamaha	1990 - 2003	40-90 HP 2-Stroke	1
291003		1986 to do	100-300 HP 2-Stroke	
291003		1997 to date	80-250 HP 4-Stroke	
291003		2000 to date	150-300 HPDI	
291012		2003 to date	25-70 HP 4-Stroke	1
291003		2007 to date	200-300 HP 4.2L V6 4-Stroke	
291003		2007 to date	F300-F350 HP 5.3V8	4
291016		2011 - 2013	F115A	
291003		2014 to date	F115B	

Cylinder dimensions (top view)

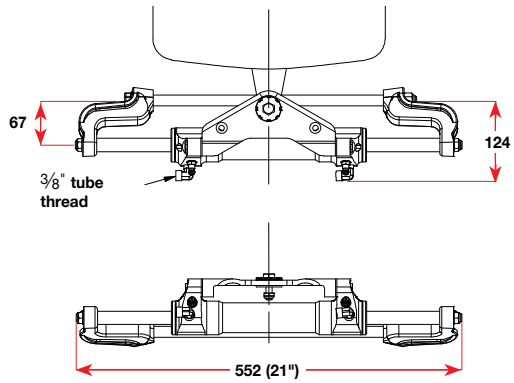

Cylinder dimensions (front view)

Minimum dimensions required			
No. of engines	a	b	c
One	559mm	152mm	127mm
Two	1244mm	152mm	127mm
Minimum engine centre distance for twin engines 660mm			

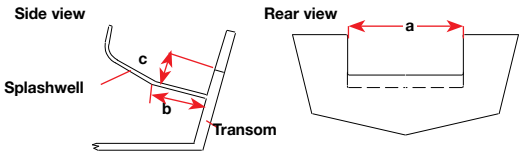

Notes

1. *Requires Space Kit #293690*
2. *May Require Extensive Cowling Modifications*
3. *MUST use High Strength Tiller bolt, Part #293692*
4. *Optional cylinder part #291016. Slight interference may occur when using the 291016, with the engine in the full tilt position*

CE

Selecting Front Mount Outboard Hydraulic Steering

1. Select the system configuration based on number of engines and total engine power.
2. From the application guide on the previous page, confirm that the cylinder will fit your specific make and model of engine(s).
3. For twin engine, single cylinder applications, select the appropriate tie bar. Refer page 777.
4. Select the appropriate helm, accessories and plumbing.
5. Ensure there is sufficient space available in the splashwell and dash area.

Single Engine

BLA Code	Description	Qty Req.	Cat. Ref. Page	**291600** Kit Inclusions	**291603** Kit Inclusions	**291605** Kit Inclusions	**291607** Kit Inclusions
2910XX*	Cylinder - front mount	1	770	1 x **291003**	1 x **291014**	1 x **291016**	1 x **291012**
293690	Spacer kit (some models only)	1	820				
291502	Helm - SeaStar® 1.7 - front mount	1	812	1 x **291502**	1 x **291502**	1 x **291502**	1 x **291502**
292997	Hose kit - nylon semi rigid 15m	1	819	1 x **292997**	1 x **292997**	1 x **292997**	1 x **292997**
293610	Nut and olive kit	4	817	4 x **293610**	4 x **293610**	4 x **293610**	4 x **293610**
291902	1 litre SeaStar Solutions® oil	3	814	3 x **291902**	3 x **291902**	3 x **291902**	3 x **291902**
	For extra steering station add:						
291502	Helm - SeaStar® 1.7 - front mount	1	812				
293604	Add a station/pilot fitting kit	1	816				
291902	1 litre SeaStar Solutions® oil	1	814				
293610	Nut and olive kit	2	817				

**** Refer page 770 for cylinder selection.***

Single Engine

(Single cylinder)

Applications up to 300HP maximum.

Number of turns - 4.9 Balanced

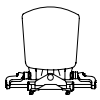

Dual Engines Fluid Link

BLA Code	Description	Qty Req.	Cat. Ref. Page	**291602** Kit Inclusions
291003*	Cylinder - front mount	2	770	2 x **291003**
293690	Spacer kit (some models only)	2	820	
291502	Helm - SeaStar® 1.7 - front mount	1	812	1 x **291502**
293002	Hose - outboard 600mm	4	819	4 x **293002**
292997	Hose kit - nylon semi rigid 15m	1	819	1 x **292997**
291902	1 litre SeaStar Solutions® oil	4	814	4 x **291902**
293632	Synchronisation valve	2	818	2 x **293632**
293610	Nut and olive kit	2	817	2 x **293610**
	For extra steering station add:			
291502	Helm - SeaStar® 1.7 - front mount	1	812	
293604	Add a station/pilot fitting kit	1	816	
291902	1 litre SeaStar Solutions® oil	1	814	
293610	Nut and olive kit	2	817	

**** Refer page 770 for cylinder selection.***

Dual Engines Fluid Link

(Dual cylinders)

Non-counter rotating applications up to 450HP maximum. Counter rotating engine applications to 600HP maximum.

Number of turns - 4.9 Balanced

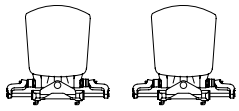

Dual Engines Tie Bar

BLA Code	Description	Qty Req.	Cat. Ref. Page
291003*	Cylinder - front mount	1	770
293690	Spacer kit (some models only)	1	820
29119X	Tie bar	1	777
291502	Helm - SeaStar® 1.7 - front mount	1	812
292997	Hose kit - nylon semi rigid 15m	1	819
293610	Nut and olive kit	4	817
291902	1 litre SeaStar Solutions® oil	3	814
	For extra steering station add:		
291502	Helm - SeaStar® 1.7 - front mount	1	812
293604	Add a station/pilot fitting kit	1	816
291902	1 litre SeaStar Solutions® oil	1	814
293610	Nut and olive kit	2	817

**** Refer page 770 for cylinder selection.***

Dual Engines Tie Bar

(Single Cylinder)

Non-counter rotating applications up to 450HP maximum. Counter rotating engine applications up to 600HP.

Number of turns - 4.9 Balanced

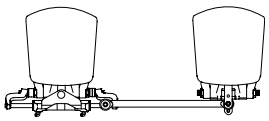

Optional Equipment

BLA Code	Description	Cat. Ref. Page
291908	Back plate for front mount helms	813
291906	20° wedge for front mount helms	814
291913	Round bezel kit	813
291504	Helm - SeaStar® 2.0 - front mount	812
291506	Helm - SeaStar® 2.4 - front mount	812
291508	Helm - SeaStar® 3.0 - front mount	812
291512	Helm - SeaStar® 1.7 - tilt	813
291515	Helm - SeaStar® 1.7 - Sport tilt	813
291516	Helm - SeaStar® 2.4 - tilt	813
291522	Helm - SeaStar® 1.7 - rear mount	813
291526	Helm - SeaStar® 2.4 - rear mount	813
291528	Helm - SeaStar® 3.0 - rear mount	813
291540	Helm - SeaStar® 2.0 Pro front mount	812
291542	Helm - SeaStar® 2.0 Pro tilt	813
2930XX	Hose - Outboard	819
2931XX	Hose - SeaStar® Pro	819
2933XX	Hose - Outboard thru bulkhead	819
2934XX	Hose - Pro thru bulkhead	819

Notes:

Four stroke engines that have a larger percentage of the motor overhanging the steering pivot and spin larger diameter props may be heavier to steer. SeaStar® Power Assist (refer page 810) recommended for heavier steering load applications.
Not recommended for use with installations in which:

a. Chopper, cleaver or surface-piercing propellers are used
b. The engine is highly elevated on the transom
c. Engine trim tabs have been removed
d. The boat speed exceeds 50 knots
e. The power exceeds maximum recommendations for the boat

N.B. Other influences in the boat type, hull shape, weight, height of motor, type of propellers, engine and hull geometry have effects on the handling of the vessel. Guides within this section are typical set ups. For fitting to unusual or special combinations, please contact BLA on 1300 252 725.

Steering systems installed using a Pro Helm will require Pro hoses. Steering systems installed using outboard or Pro hose require 293602 when adding a second station/pilot.

N.B. SeaStar® recommend outboard hoses on all front mount cylinder installation.

SeaStar Adjustable Outboard Hose Kits

Not sure of the hose length required to install your hydraulics into your vessel? BLA has made available the most popular kit to now include a 50 foot length of hose and 2 x re-usable fittings. Simply cut the hose to length and apply fittings.

291601

BLA Code	Description	Qty Req.	Cat. Ref. Page	**291601** Kit Inclusions	**291604** Kit Inclusions	**291640** Kit Inclusions
291003	Cylinder front mount	1	815	1 x **291003**	1 x **291016**	1 x **291012**
291502	Helm - SeaStar® 1.7	1	812	1 x **291502**	1 x **291502**	1 x **291502**
291902	1 litre SeaStar Solutions® oil	3	814	3 x **291902**	3 x **291902**	3 x **291902**
293050	50 foot outboard hose	1	819	1 x **293050**	1 x **293050**	1 x **293050**
297332	Re-usable hose fitting	2	820	2 x **297332**	2 x **297332**	2 x **297332**
293001	Rubber boot	1	N/A	1 x **293001**	1 x **293001**	1 x **293001**

SeaStar Standard Outboard Hose Kits - Front Mount

Kits comprise of 1 x **291502** helm, 1 x **2910XX** cylinder, 3 x **291902** hydraulic oil and 2 x **2930XX** outboard hose. Refer to engine application guide on page 770 for cylinder/motor details.

BLA Code	Cylinder Type	Hose Length ft
290510	**291003**	10
290511	**291003**	11
290512	**291003**	12
290513	**291003**	13
290514	**291003**	14
290515	**291003**	15
290516	**291003**	16
290517	**291003**	17
290518	**291003**	18
290519	**291003**	19
290520	**291003**	20
290522	**291003**	22
290526	**291003**	26

BLA Code	Cylinder Type	Hose Length ft
290610	**291014**	10
290611	**291014**	11
290612	**291014**	12
290613	**291014**	13
290614	**291014**	14
290615	**291014**	15
290616	**291014**	16
290617	**291014**	17
290618	**291014**	18
290619	**291014**	19
290620	**291014**	20

BLA Code	Cylinder Type	Hose Length ft
290710	**291016**	10
290711	**291016**	11
290712	**291016**	12
290713	**291016**	13
290714	**291016**	14
290715	**291016**	15
290716	**291016**	16
290717	**291016**	17
290718	**291016**	18
290719	**291016**	19
290720	**291016**	20

BLA Code	Cylinder Type	Hose Length ft
290810	**291012**	10
290811	**291012**	11
290812	**291012**	12
290813	**291012**	13
290814	**291012**	14
290815	**291012**	15
290816	**291012**	16
290817	**291012**	17
290818	**291012**	18
290819	**291012**	19
290820	**291012**	20

N.B. These kits also contain 293690 adaptor.

SeaStar Hose Kits

- Front Mount Bulkhead

Kits comprise of 1 x **291502** helm, 1 x **2910XX** cylinder, 3 x **291902** hydraulic oil and 2 x **2933XX** bulkhead hoses.

BLA Code	Cylinder Type	Hose Length ft
290560	**291003**	10
290561	**291003**	11
290562	**291003**	12
290563	**291003**	13
290564	**291003**	14
290565	**291003**	15
290566	**291003**	16
290567	**291003**	17
290568	**291003**	18
290569	**291003**	19
290570	**291003**	20
290572	**291003**	22
290576	**291003**	26

BLA Code	Cylinder Type	Hose Length ft
290660	**291014**	10
290661	**291014**	11
290662	**291014**	12
290663	**291014**	13
290664	**291014**	14
290665	**291014**	15
290666	**291014**	16
290667	**291014**	17
290668	**291014**	18
290669	**291014**	19
290670	**291014**	20

BLA Code	Cylinder Type	Hose Length ft
290760	**291016**	10
290761	**291016**	11
290762	**291016**	12
290763	**291016**	13
290764	**291016**	14
290765	**291016**	15
290766	**291016**	16
290767	**291016**	17
290768	**291016**	18
290769	**291016**	19
290770	**291016**	20

BLA Code	Cylinder Type	Hose Length ft
290860	**291012**	10
290861	**291012**	11
290862	**291012**	12
290863	**291012**	13
290864	**291012**	14
290865	**291012**	15
290866	**291012**	16
290867	**291012**	17
290868	**291012**	18
290869	**291012**	19
290870	**291012**	20

Side Mount Outboard Hydraulic Steering System

SeaStar Outboard Hydraulic Steering System - Side Mount

Features:

- The simplest of hydraulic installations
- Independent engine tilt for twin engine installations
- One common cylinder fits most engines
- Convenient tilt tube mounting as per ABYC/NMMA/BIA standards
- Ideal for shallow splashwells
- Anodised alloy cylinder for reduced friction and longer seal life
- Chromed stainless steel push rod for extended seal life

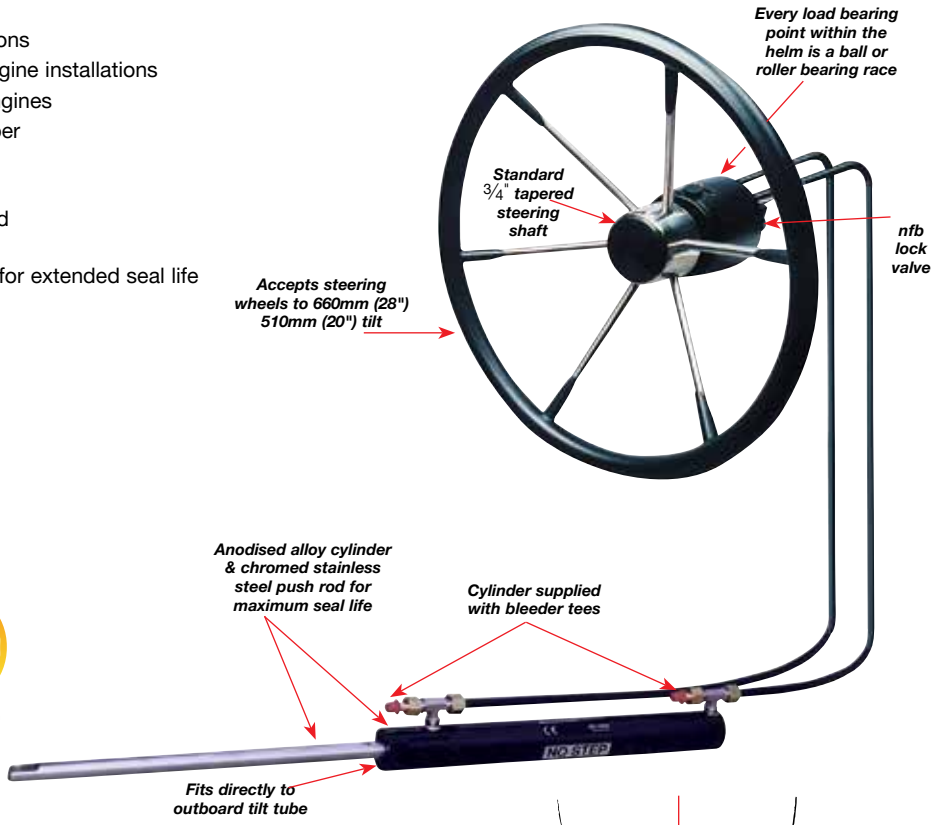

EASY TO INSTALL
ONLY THREE COMPONENTS HELM, CYLINDER, TUBE OR HOSE

BLA Code	Description
291010	Side mount cylinder

Displacement: 135.2cc (8.3 cu. in)
Bore: 31.7mm (1.25")
Stroke: 203mm (8")

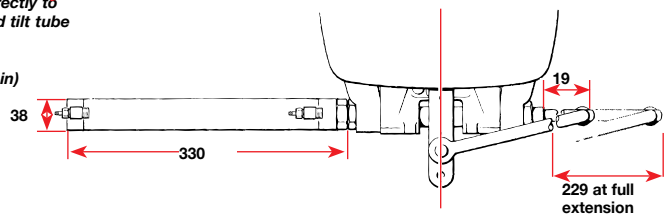

Unbalanced Cylinder - Side View

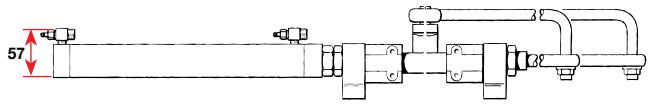

Right Turn

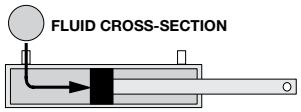

Left Turn

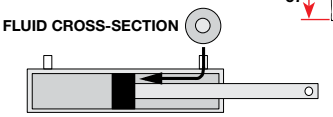

N.B. Unbalanced cylinders have unequal wheel turns. When the helm is turned one turn, a certain volume of fluid is pumped into the cylinder. On one side of an unbalanced cylinder piston is the push rod, which reduces the effective cylinder volume. The cylinder area on the other side of the piston has no push rod. The rod side of the piston will move faster per turn of the wheel because less space is available for fluid than on the side with no rod.

UNBALANCED SINGLE CYLINDER SYSTEMS CANNOT BE USED IN CONJUNCTION WITH SEASTAR® PRO HELM.

Selecting a Side Mount Outboard Steering System

From the selection guide (next page) select the system configuration based on:

1. The number of engines and total engine power
2. Select the **291198** tie bar if a dual engine, single cylinder installation is required
3. Select the appropriate helm and accessory hardware for each steering station
4. Select the fitting and hose kits required for the installation
5. Confirm there is sufficient space available in the splashwell and dash areas for the steering components.

Selecting Side Mount Outboard Hydraulic Steering

SEASTAR™

Single Engine

BLA Code	Kit Inclusions	Cat. Ref. Page
291610	1 x **291010** Cylinder - side mount	815
	1 x **291502** Helm - SeaStar® 1.7 - front mount	812
	1 x **292997** Hose kit - nylon semi rigid 15m	819
	4 x **293610** Nut and olive kit	817
	3 x **291902** 1 litre SeaStar Solutions® oil	814
	For extra steering station add:	
	1 x **291502** Helm - SeaStar® 1.7 - front mount	812
	1 x **293604** Add a station/pilot fitting kit	816
	1 x **291902** 1 litre SeaStar Solutions® oil	814
	2 x **293610** Nut and olive kit	817

Single Engine

(Single cylinder)

Applications up to 300HP maximum.

Number of turns - 4.9

Not compatible with Pro helm

Dual Engines Fluid Link

BLA Code	Kit Inclusions	Cat. Ref. Page
291612	1 x **291010** Cylinder - side mount	815
	1 x **291502** Helm - SeaStar® 1.7 - front mount	812
	1 x **292997** Hose kit - nylon semi rigid 15m	819
	6 x **293610** Nut and olive kit	817
	4 x **291902** 1 litre SeaStar Solutions® oil	814
	2 x **293632** Synchronisation valve	818
	For extra steering station add:	
	1 x **291502** Helm - SeaStar® 1.7 - front mount	812
	1 x **293604** Add a station/pilot fitting kit	816
	1 x **291902** 1 litre SeaStar Solutions® oil	814
	2 x **293610** Nut and olive kit	817

Dual Engines Fluid Link

(Dual cylinders)

Non-counter rotating applications up to 450HP maximum. Counter rotating engine applications to 600HP maximum.

Number of turns - 4.9

Compatible with Pro helm

Dual Engines Tie Rod

BLA Code	Kit Inclusions	Cat. Ref. Page
291614	2 x **291010** Cylinder - side mount	815
	1 x **291198** Tie bar	777
	1 x **291502** Helm - SeaStar® 1.7 - front mount	812
	1 x **292997** Hose kit - nylon semi rigid 15m	819
	4 x **293610** Nut and olive kit	817
	3 x **291902** 1 litre SeaStar Solutions® oil	814
	For extra steering station add:	
	1 x **291502** Helm - SeaStar® 1.7 - front mount	812
	1 x **293604** Add a station/pilot fitting kit	816
	1 x **291902** 1 litre SeaStar Solutions® oil	814
	2 x **293610** Nut and olive kit	817

Dual Engines

(Single Cylinder)

Non-counter rotating applications up to 450HP maximum. Counter rotating engine applications up to 600HP maximum.

Number of turns - 4.9

Not compatible with Pro helm

SeaStar Outboard Hose Kits - Side Mount

SEASTAR™

Kits comprise of 1 x **291502** helm, 1 x **291010** cylinder, 3 x **291902** hydraulic oil and a choice of either 2 x standard outboard hoses, **2930XX** or 2 x thru bulkhead outboard hoses.

BLA Code	Cylinder Type	Hose Length ft
290910	Standard	10
290911	Standard	11
290912	Standard	12
290913	Standard	13
290914	Standard	14
290915	Standard	15
290916	Standard	16
290917	Standard	17
290918	Standard	18
290919	Standard	19
290920	Standard	20

BLA Code	Cylinder Type	Hose Length ft
290960	Bulkhead	10
290961	Bulkhead	11
290962	Bulkhead	12
290963	Bulkhead	13
290964	Bulkhead	14
290965	Bulkhead	15
290966	Bulkhead	16
290967	Bulkhead	17
290968	Bulkhead	18
290969	Bulkhead	19
290970	Bulkhead	20

Pro Hydraulic Steering

SEASTAR SOLUTIONS®

SEASTAR™

SeaStar Pro Hydraulic Steering System

SeaStar's premier No FeedBack™ System, designed to be the best steering system available for the performance boating enthusiast. SeaStar® Pro is recommended for single outboards up to 300HP, even with jackplates and performance props.

Features:

- A lock valve unique to SeaStar® Pro, provides instant steering response without loss of engine feel or comfort
- High speed course running with unrivalled response
- Effortless No FeedBack™ steering
- Safer trim adjustment for added performance
- Superior boat control
- Meets ABYC/NMMA/BIA standards

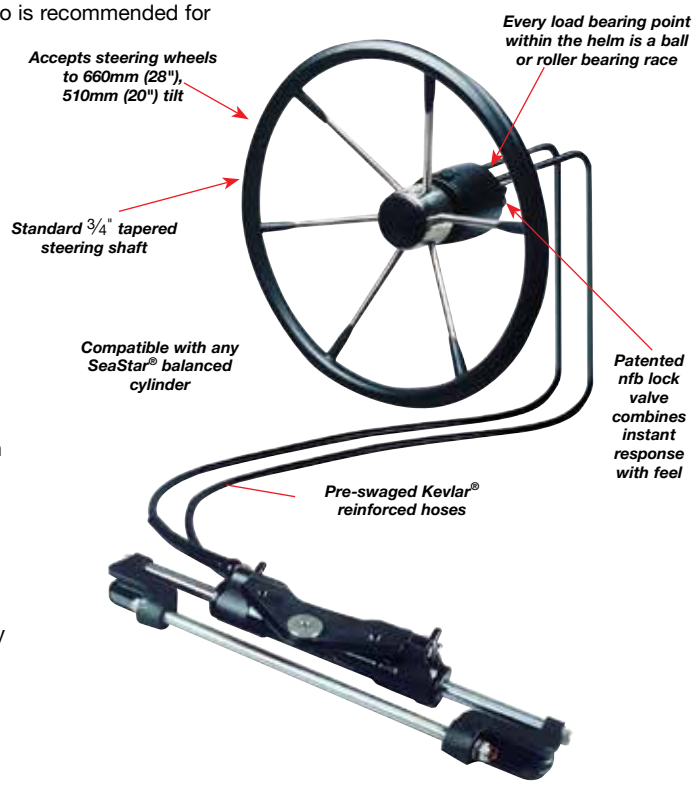

SeaStar Pro Hydraulic Cylinder

The front mount Pro Hydraulic Cylinder by SeaStar® has been specifically designed and manufactured to increase feel and control of high performance outboard powered vessels that have a high level of wear and tear and are used frequently.

Key features of the Pro Cylinder include, heavier duty pivot plate bushes that reduce wear in harsh conditions and longer cylinder rod bushes which create a better seal on the end gland. The cylinder is more rigid due to the addition of the key ways on the support rod and support brackets. The patented 'pivot' mount design, utilised on the Pro Cylinder, guarantees continuous smooth, comfortable steering, and maximum efficiency even at the 'hard-over' positions.

BLA Code	Description
291018	SeaStar® Pro cylinder - HC6345
291020	SeaStar® Pro cylinder - HC6358

N.B. Please refer to the engine application guide below for the correct engine/ cylinder match

Engine Application Guide - Pro and Standard Front Mount

BLA Code	Make	Year	Capacity	Notes
291018	Honda	1996 to date	150-300HP	Not available for BF series engines
291018	Honda	2001 to date	BF200-BF250	Requires Optional cylinder **291004**
291018	Honda	2003 to date	BF150	Requires Optional cylinder **291004**
N/A	Johnson / Evinrude	1977 - 1990	150-300HP	
291018	Johnson / Evinrude	2002 to date	150-250HP 4-Stroke	Optional Cylinder **291003**
291018	Johnson / Evinrude	2003 to date	150-300HP Etech	Optional Cylinder **291003**
N/A	Johnson / Evinrude	2005 to date	E250HP Vindicator	
291018	Mercury	1989 to date	150-300 XS Engines	
291018	Mercury	1989 to date	150-300HP 2-Stroke & 4-Stroke	Optional Cylinder **291003**
291018	Suzuki	1986 to date	150-300HP 2 and 4-Stroke	Optional Cylinder **291003**
291018	Yamaha	1986 to date	150-350HP 2 and 4-Stroke	Optional Cylinder **291003**

Cylinder dimensions (top view)

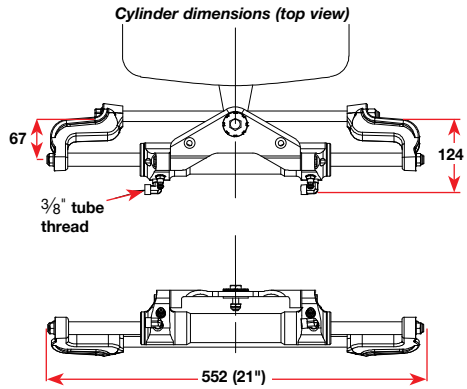

Cylinder dimensions (front view)

Minimum dimensions required			
No. of engines	a	b	c
One	559mm	152mm	127mm
Two	1244mm	152mm	127mm
Minimum engine centre distance for twin engines 660mm			

Side view

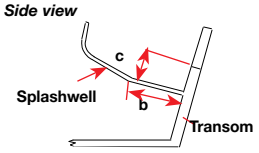

Rear view

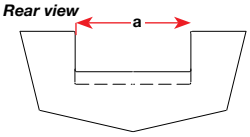

CE

Selecting SeaStar® Pro Hydraulic Steering

1. Choose either the front mount pro helm or tilt pro helm and confirm that there is sufficient space in the dash area for the steering components.
2. Select any balanced outboard or trunnion mounted cylinder.
3. For front mount cylinders, refer pages 770 & 775, confirm that the cylinder selected will fit your specific make, model and year of motor.
4. Side mount cylinders may only be used in a twin engine, twin cylinder, fluid linked balanced system.
5. Select the fittings and hose kits required for the installation.

For front mount single engine steering you can order one of our complete steering systems as detailed below.

N.B. Complete front mount steering systems may require an alternative adaptor kit depending on the motor to which the steering is to be fitted. Refer pages 770.

Steering In A Box

Retail packaged SeaStar® Pro hydraulic steering system for single outboard boats.

Contains:

- **2918XX** system (last two digits denote hose length in feet)
- Bleeder kit
- Detailed instructions

Single Engine, Front mount pivot cylinder

BLA Code	Kit Inclusions	Cat. Ref. Page
2918XX	1 x **291540** Helm SeaStar® - 2.0 Pro - front mount	812
	1 x **291003** Cylinder - front mount pivot	770
	1 x **2910XX*** Cylinder - Pro front mount	775
	3 x **291902** 1 litre SeaStar Solutions® oil	814
	2 x **2931XX** Hose - SeaStar® Pro	819

Last two digits of kit denotes length of hose in feet

BLA Code	Description
291814	Pro steering kit with 4.27m (14') hoses
291816	Pro steering kit with 4.87m (16') hoses
291818	Pro steering kit with 5.49m (18') hoses
291824	Pro steering kit with 7.32m (24') hoses

Single Engine

(Single front mount pivot cylinder)

Applications up to 300HP maximum. Especially those capable of speeds over 110kph/60kts.

Number of turns - 4.2

Balanced

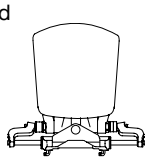

Dual Engines, Fluid Link, Twin Front Mount Pivot Cylinders

BLA Code	Description	Qty Req.	Cat. Ref. Page
291540	Helm SeaStar® - 2.0 Pro - front mount	1	812
2910XX*	Cylinder - front mount pivot	2	770
2910XX*	Cylinder - Pro front mount	1	775
291902	1 litre SeaStar Solutions® oil	4	814
2931XX	Pro hose - helm to syncro valve	1	819
2931XX	Pro hose - helm to cylinder	1	819
2931XX	Pro hose - cylinder to syncro valve	2	819
2931XX	Pro hose - cylinder to syncro valve	1	819
293632	Hydraulic synchro valve	1	818

Last two digits of pro hose denotes length of hose in feet

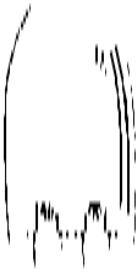

Dual Engines Fluid Link

(Dual cylinders)

Non-counter rotating applications up to 450HP maximum. Counter rotating engine applications to 600HP maximum.

Number of turns - 4.2

Balanced

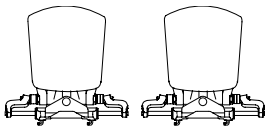

Dual Engines, Fluid Link, Twin Side Mount Cylinders

BLA Code	Description	Qty Req.	Cat. Ref. Page
291540	Helm SeaStar® - 2.0 Pro - front mount	1	812
291010	Cylinder - side mount	2	815
291902	1 litre SeaStar Solutions® oil	3	814
2931XX	Pro hose - helm to syncro valve	1	819
2931XX	Pro hose - helm to cylinder	1	819
2931XX	Pro hose - cylinder to syncro valve	2	819
2931XX	Pro hose - cylinder to syncro valve	1	819
293632	Hydraulic synchro valve	1	818
	For extra steering station add:		
291540	Helm SeaStar® - 2.0 Pro - front mount	1	812
293602	Add a station fitting kit	1	816
291902	1 litre SeaStar Solutions® oil	1	814

Last two digits of pro hose denotes length of hose in feet

Dual Engines Fluid Link

(Dual cylinders)

Non-counter rotating applications up to 450HP maximum. Counter rotating engine applications to 600HP maximum.

Number of turns - 4.9

Balanced

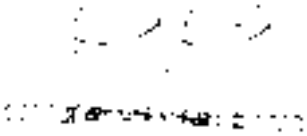

Optional Equipment

BLA Code	Description	Cat. Ref. Page
291542	Pro helm 2.0 tilt	813
291908	Back plate kit for front mount helms	813
291906	20° wedge for front mount helms	814

**** Some motors may require a different cylinder, refer to pages 770 & 775 for details.***

N.B. Four stroke engines that have a larger percentage of the motor overhanging the steering pivot and spin larger diameter props may be heavier to steer. SeaStar® Power Assist (refer page 810) recommended for heavier steering load applications. Other influences in the boat's type, hull shape, weight, height of motor, type of propellers, engine and hull geometry have effects on the handling of the boat. Guides within this section are typical normal set ups. For fitting to special or unusual combinations, please contact BLA on 1300 252 725.

Front Mount Cylinder Tie Bars

Designed specifically for installation with the SeaStar® front mount pivot cylinders. The unique design provides mounting flexibility and independent engine tilt with fast easy installation to the majority of outboard makes and models. Materials: stainless steel and powder coated anodised aluminium.

291190

291192

291194

291195

291196

291188

Universal Tie Bar Kits

Stainless steel ball joint and threaded rod. Stainless outer sleeve. Provides motor alignment and adjustment.

BLA Code	Engine Centre Distance		Cylinder Suited
	min. mm	max.mm	
291198	660	914	Side mount, inboard, stern drive
291199	600	914	Splashwell mount

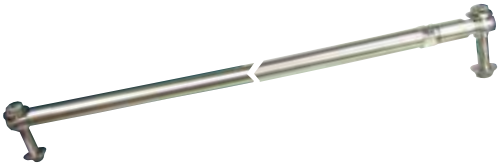

Front Mount Twin Outboard Steering System

Engine Application Guide

Cylinder BLA Code	Make	Year	Capacity	Number	Tie Bar Kits for Twin Engine using Single Cyl	Dual Cyl	Notes
291003	Force	1985 to date	90-150HP	HC5345-3			
291003	Honda	1996 to date	75-90HP	HC5345-3	**291190**	**291192**	3
		1998 - 2009	115-130HP	HC5347-3			5
291003		1998 to date	30-50HP	HC5345-3	**291190**	**291192**	2
291003		2001 to date	150HP 4-Stroke	HC5345-3	**N/A**	**291192**	7
291004		2001 to date	225-250HP 4-Stroke	HC5445-3	**291190**	**291192**	
291003		2003 to date	BF135HP	HC5345-3	**291194**	**291192**	
291003		2010 to date	115HP	HC5345-3	**291194**	**291192**	7
291012	Johnson / Evinrude	1977 - 1990	65-300HP	HC5348-3	**291194**	**291192**	
		1988 - 1997	250-300HP V8	HC5342-3			5
291003		1991 to date	40-300HP	HC5345-3	**291194**	**291192**	Inc. ETech Engines
291003		1996 to date	75-250HP Ficht	HC5345-3	**291194**	**291192**	
291016		1998 to date	40-140HP 4-Stroke	HC5358-3	**291194**	**291192**	2
291016		2000 to date	115HP Ficht	HC5358-3	**291194**	**291192**	2
291003		2002 to date	200-225HP 4-Stroke	HC5345-3	**291194**	**291192**	
291012		2005 to date	E250 DPX Vindicator	HC5348-3	**291194**	**291192**	
291003		2007 to date	3.3L/3.4L 200-250HP	HC5345-3	**291194**	**291192**	Inc. H.O. Models.
291003	Mercury	1984 - 1994	2.4/2.5HP EFI	HC5345-3	**291190**	**291192**	4
291003		1989 to date	75-300HP	HC5345-3	**291190**	**291192**	3
291003		1996 to date	75-200HP 2 & 4-Stroke	HC5345-3	**291190**	**291192**	
291003		1998 to date	30-60HP	HC5345-3	**291190**	**291192**	2
291016		2002 - 2003	225HP 4-Stroke	HC5358-3	**291190**	**291192**	1
		2003 to date	150-200XS	MUST Use Tournament Cylinders			
		2003 to date	250-300 HP XS	MUST Use Tournament Cylinders			
291003		2004 to date	150-200HP Verado	HC5345-3	**291190**	**291192**	
291003	Nissan	1990 to date	90-140HP	HC5345-3	**291190**	**291192**	
291003	Suzuki	1986 to date	100HP	HC5345-3	**291194**	**291192**	
291003		1986 - 2002	115-140HP	HC5345-3	**291190**	**291192**	Not 1996
291003		1986 to date	150-300HP 2 & 4 Stroke	HC5345-3	**291194**	**291192**	
291012		1996 only	115-140HP	HC5348-3	**291190**	**291192**	
291016		1998 to date	40-140HP 4-Stroke	HC5358-3	**291194**	**291192**	2
291016		2003 to date	90HP 4-Stroke	HC5358-3	**291194**	**291192**	2
291003		2013 to date	DF150 – DF175 HP	HC5345-3	**291190**	**291192**	
291003	Yamaha	1986 to date	100-250HP 2-Stroke	HC5345-3	**291190**	**291192**	
291003		1986 to date	40-90HP	HC5345-3	**291194**	**291192**	
291003		2000 to date	150-300 HPDI	HC5345-3	**291190**	**291192**	
291016		2001 - 2003	80-250HP 4-Stroke	HC5358-3	**291190**	**291192**	1
291016		2003 to date	F200-F250 3.3L	HC5358-3	**291190**	**291192**	
291012		2003 to date	25-70HP 4-Stroke	HC5348-3	**291194**	**291192**	
291003		2007 to date	200-300HP 4.2L V6 4-Stroke	HC5345-3	**291190**	**291192**	2
		2007 to date	F300-F350 HP 5.3V8	MUST use Tournament Cylinders			
291016		2011 - 2013	115A	HC5358-3	**291194**	**291192**	
291003		2014 to date	115B	HC5345-3	**291194**	**291192**	

On twin installations a fluid link is recommended for 115-130HP Honda motors

NOTICE:
HO6001, HO6002 and HO6003 are for engine centres up to 36".
For wider engine centres please contact BLA on 1300 252 725.

291192

291190/4

Notes

1. *HC5345 is optional for single engine only applications. DO NOT use 291003 (HC5345) for Twin engine applications as operational interference may occur.*
2. *Requires kit 293690 (HO5090).*
3. *Minimum engine centre = 27.*
4. *May require extensive cowling modifications.*
5. *HO5030 and HO5064 comes without tie bar.*
6. *One cylinder per engine. Must use Mercury supplied tiller bolt for installation.*
7. *Interference will occur when using a single 291003 (HC5345) cylinder and 291194 (HO6003) tie bar when installed in the aft hole on the steering arm.*

Options include:
a) install tie bar into most forward hole (this will limit steering articulation),
b) purchase K-6 Cylinder, and tiebar kit part 291198 (HO5009). There will be no interference when using twin 291003 (HC5345) cylinders.

Tournament Series Cylinder and Adjustable Tie Bar

Designed for extreme conditions and applications where performance and reliability are paramount. The new heavy duty Tournament series cylinder and adjustable tie bar are suitable for makes of outboards of 200HP or more as single engine installations and ideally suited for all high performance multiple engine applications of two engines or more.

The Tournament cylinder is suitable for use with all SeaStar® helms and SeaStar® power assist units which provide outstanding performance and reliability. Featuring a completely new heavy duty universal cylinder design with reversible integrated bolt on stainless steel tie bar plates.

The extreme heavy duty cylinder has been manufactured to include over engineered support brackets, barrel, shaft and seals to provide years of trouble free performance. The new pivot plate design provides incredibly smooth articulation and includes a sealed joint for superior reliability.

The newly designed heavy duty adjustable tie bars are available in four lengths providing the perfect fit for twin, triple or quad installations. Each tie bar is equipped with stainless steel adjustable O-ring sealed elbow fittings which can be easily orientated in any direction.

To ensure the very best performance, cylinders must be plumbed in parallel and can not be series connected. The only exception is if the cylinder installation is utilising a liquid tie bar. Cylinders and the appropriate tie bars are sold individually and require the appropriate tie bar and cylinder hardware fitting kit, with the exception of a complete single engine, single cylinder installation.

Features:

- Robust appearance
- Universal cylinder (i.e. no individual port/ starboard/centre configurations)
- Bolt-on stainless steel tie bar plates
  - Reversible from left to right, providing high or low tie bar connections
  - Easily adaptable to future engine offerings
- Robust design
  - Heavy duty support brackets, barrel, shaft, pivot plate and seals
- Adjustable O-ring fittings (no need to remove for adjustment)
- Improved accessibility to bleeders
- Incorporates proven design features from Pro cylinders (keyed support bracket, stainless steel wear washer)

Important: To ensure the very best performance, cylinders must be plumbed in parallel and cannot be series connected. The only exception is if the cylinder installation is utilising a liquid tie bar.

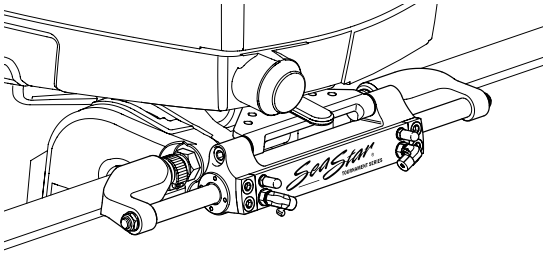

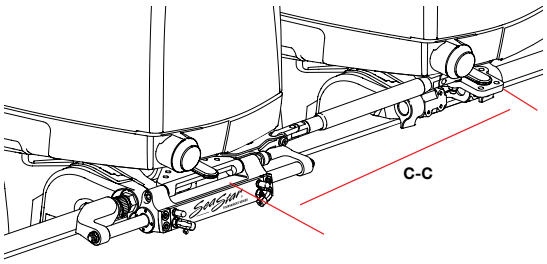

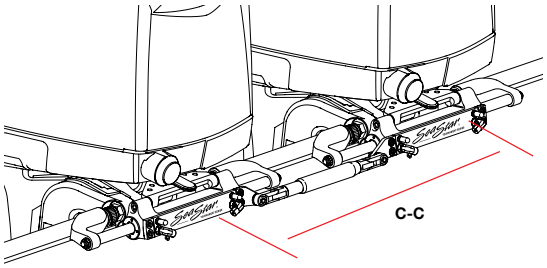

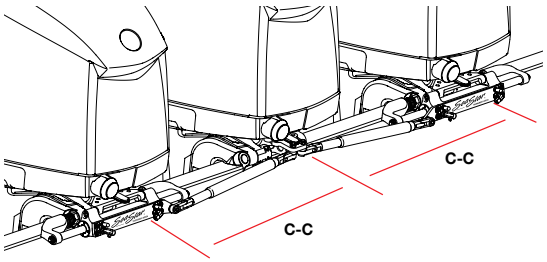

SeaStar Tournament Series Cylinder

- Maximum tilt angle shown - 67°
- Typical transom thickness shown, but will vary

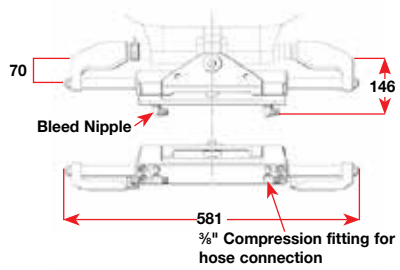

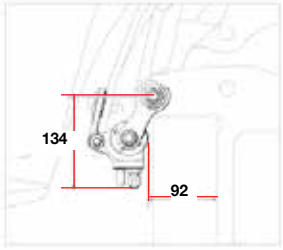

BLA Code	Description
291050	Cylinder Tournament 2 o/b front mount
291052	Cylinder Tournament 2 front mount c/w single engine hardware kit
291054	Tournament short stroke cylinder hc6850
291210	Tie bar adjustable t/s tournament 2 cyl small
291212	Tie bar adjustable t/s tournament 2 cyl med
291214	Tie bar adjustable t/s tournament 2 cyl lge
291216	Tie bar adjustable t/s tournament 2 cyl xlge
291218	Tie bar adjustable t/s tournament 2 cyl xxlge (new)
291220	Hardware kit t/s tournament 2 1 engne 1 cyl
291222	Hardware kit t/s tournament 2 2 engne 1 cyl
291224	Hardware kit t/s tournament 2 2 engne 2 cyl
291226	Hardware kit t/s tournament 2 3 engne 2 cyl
291228	Hardware kit t/s tournament 2 4 engne 2 cyl
293608	ORB tee fitting kit t/s tournament 2 cyl

SeaStar Tournament Series Cylinder and Tie Bar - Application Guide

	Cylinder			Hardware Kit			Tie Bar			Centre to Centre	
Configuration	BLA Code	SeaStar Code	Qty	BLA Code	SeaStar Code	Qty	BLA Code	SeaStar Code	Qty	mm	Notes
Single Engine	**291052**	HC6845S	1	Included	Included				N/A	N/A	1
Twin Engine – Single Cylinder (STBD)	**291050**	HC6845	1	**291222**	HA6802	1	**291212**	HO6821	1	635 – 650	1,3,4,5 HA6802 Drive Bracket Availability – TBD
							291214	HO6822		653 – 777	
							291216	HO6823		780 – 991	
Twin Engine – Dual Cylinder	**291050**	HC6845	2	**291224**	HA6804	1	**291210**	HO6820	1	635 – 673	1,3,4,5
							291212	HO6821		676 – 744	
							291214	HO6822		747 – 869	
							291216	HO6823		871 – 1092	
Triple Engine – Dual Cylinder	**291050**	HC6845	2	**291226**	HA6806	1	**291214**	HO6822	2	635 – 709	Maximum drop: ≤ 76mm 1 - 5
							291216	HO6823		711 – 914	
Quad Engine – Dual Cylinder	**291050**	HC6845	2	**291228**	HA6811	1	**Contact BLA 1300 252 725**				1,3,4,5
Quintuplet Engine (Plus)					**Contact BLA 1300 252 725**						1,3,4,5

Important: Each engine configuration requires a hardware kit and tie bar kit(s), with the exception of the single engine configuration

NOTES

1) Installation may vary according to the following factors: engine mounting height, transom thickness, use of transom savers, tiller bolt hole location, engine tilt range, and engine size.
2) For centre engine drops greater than 3 inches (76mm), please consult BLA on 1300 252 725.
3) Tie bar length may vary depending on toe in/toe out setup. To allow for toe, add or subtract from your nominal engine centre to centre distance.
4) Based on recommended engine manufacturer minimum centre to centre distances. Deviating from these recommendations may require stroke limiting cylinders and/or engine tilt limiting, please consult BLA on 1300 252 725.
5) Cylinders must be plumbed in parallel only, no series connections. Only exception is if cylinders are utilising a liquid tie bar.

SeaStar Tournament Steering System Kit

- Front Mount

BLA Code	Inclusions	Cat. Ref. Page
291830	1 x **291052** Cylinder front mount	778
	1 x **291502** Helm - SeaStar® 1.7	812
	3 x **291902** 1 litre SeaStar Solutions® oil	814
	1 x **293050** 50 foot outboard hose	819
	2 x **297332** Re-usable hose fitting	820
	1 x **293001** Rubber boot	N/A

nfb

Front Mount Triple Outboard Steering System

SEASTAR SOLUTIONS®

SEASTAR™

Tie Bar Application Guide - 291195

BLA Code	Engine Manufacturer	Year	Model	Cylinders BLA Code
291195 x 1	Mercury/Mariner	1989 to date	75-275HP	**291003** x 2

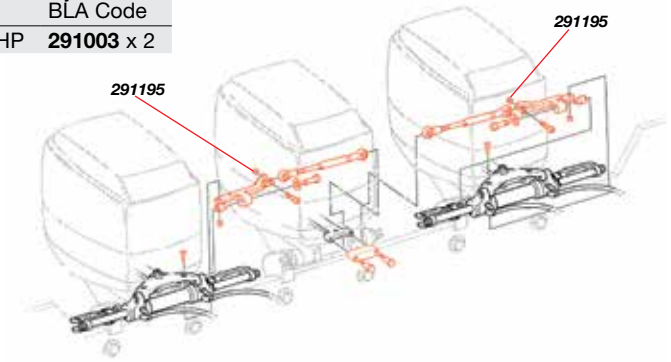

Tie Bar Application Guide - 291196

BLA Code	Engine Manufacturer	Year	Model	Cylinders BLA Code
291196 x 1	OMC	1991 to date	90-175HP	**291003** x 2
291196 x 1	OMC	1996 to date	90-225HP FICHT	**291003** x 2
291196 x 1	Yamaha	1990 to date	225-250HP 4 stroke	**291003** x 2

N.B. Minimum engine centres 610mm
Maximum engine centres 900mm

Ordering Guide - Triple Engine, Dual Cylinder, Tie Bar

BLA Code	Description	Qty Req.	Cat. Ref. Page
2910XX	Cylinder - front mount	2	770
293690	Spacer kit (some models only)	2	820
29119X	Tie rod kits	2	777
291506	Helm - SeaStar® 2.4	1	812
2931XX	Pro Hose - helm to cylinder one	2	819
2931XX	Pro Hose - cylinder one to cylinder two	2	819
293618	Tee - replaces elbow in cylinder one	2	817
291902	1 litre SeaStar Solutions® oil	4	814

N.B. Last two digits of Pro Hoses denotes length of hose in feet

SeaStar Hydraulic Service Kits & Parts

SEASTAR™

BLA Code	SeaStar Solutions® Part No.	
293740	HS5151	Seal kit to suit all SeaStar® 1.7 and 2.4 helm pumps manufactured from 1984 through to 1989
293741	HP6032	Seal kit containing quad seal, keyway, helm nut and mount nuts for current BayStar™ and SeaStar® helms, including: **291490**, **291492**, **291502**, **291504**, **291506**, **291512**, **291515**, **291516**, **291522**, **291526**, **291540** and **291542**.
293742	HS5176	Seal kit to suit HH5271 (**291502**), HH5273 (**291504**), HH5272 (**291506**), HH5741 (**291512**), HH5291 (**291515**), HH5742 (**291516**), HH5261 (**291522**), HH5262 (**291526**), HH5770 (**291540**) and HH5774 (**291542**) helms
293712	HS5152	Seal kit to suit HC5340 obsolete cylinder with snap-in end fittings
293714	HS5157	Seal kit to suit HC5345 (**291003**), HC5347 (**291014**), HC5348 (**291012**) and HC5358 (**291016**). It is also the replacement seal kit for HC5342 and HC5365 obsolete cylinders with screw in fittings. Includes tools.
293715	HS5167	Seal kit to suit HC5345 (**291003**), HC5347 (**291014**), HC5348 (**291012**) and HC5358 (**291016**). It is also the replacement seal kit for HC5342 and HC5365 obsolete cylinders with screw in fittings. Excludes tools.
293716	HS5153	Seal kit to suit HC5370 (**291010**) cylinder
293720	HS5154	Seal kit to suit HC5380 (**291008**), HC5303 (**291076**), HC5312 (**291060**), HC5328 (**291026**), HC5329 (**291022**), HC5330 (**291024**) and HC5331 (**291028**) cylinders
293722	HS5155	Seal kit to suit HC5313 (**291062**) and HC5332 (291029) cylinders
293724	HS5156	Seal kit to suit HC5314 (**291064**) and HC5326 (291030) cylinders
293726	HS5182	Seal kit to suit HC5318 (**291066**) cylinder
293728	HS5183	Seal kit to suit HC5319 (**291068**) cylinder
293766	HP6018	Replacement "Bull horn" support brackets (pk 2) to suit HC5345 (**291003**), HC5347 (**291014**), HC5348 (**291012**) and HC5358 (**291016**)
293770	HP6016	Replacement support rod to suit HC5340, HC5342, HC5345 (**291003**), HC5347 (**291014**), HC5348 (**291012**), HC5358 (**291016**), HC6345 (**291018**) and HC6358 (**291020**)

N.B. Other influences in the boat's type, hull shape, weight, height of motor, type of propellers, engine and hull geometry have effects on the handling of the boat. We strongly recommend specification of triple engine systems only in conjunction with our sales department.

Compact Universal Base-Mount Outboard Hydraulic Steering

SEASTAR SOLUTIONS®
SEASTAR™

Ultra sleek cylinder design requires less space around the engine and improves the appearance of your boat. Cylinder remains stationary, eliminating the chafing and wear of hoses associated with other systems. Accepts port or starboard hose connections. Entire system is designed for fast and easy installation.

Neatly mounts to all V4 and V6 Engines without using the Tilt Tube.

Easily installs on motors 75HP and up. Mercury/Mariner, Evinrude & Johnson, Suzuki, Yamaha and Honda-Force.

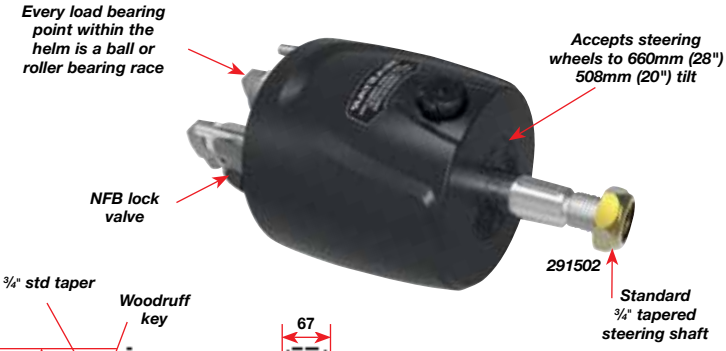

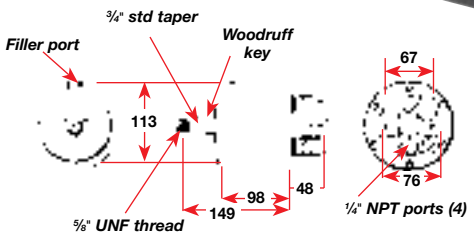

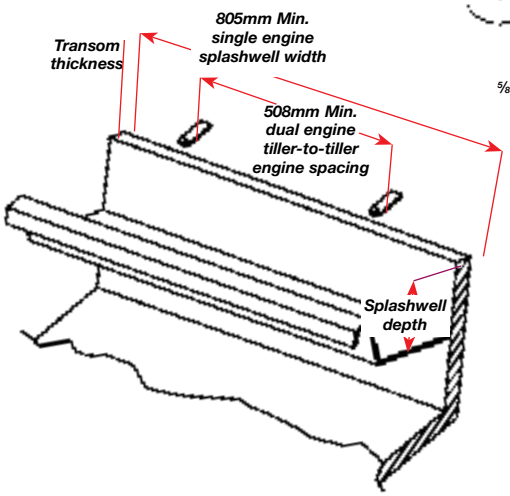

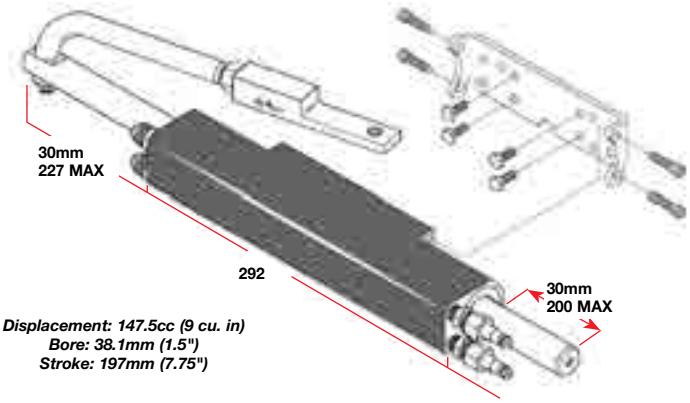

Selecting Compact Universal Base Mount Outboard Hydraulic Steering

1. Select the system configuration based on number of engines and total engine power.
2. Select the appropriate helm, accessories and plumbing.
3. Ensure there is sufficient space available in the splashwell and dash area.

Single Engines

BLA Code	Description	Qty Req.	Cat. Ref. Page	**296004** Kit Inclusions
296106	Cylinder - universal base mount	1	781	1 x **296106**
291502	Helm - Seastar® 1.7 front mount	1	812	1 x **291502**
293614	Connector fitting ⅜" tube - ¼" NPT	2	817	2 x **293614**
292997	Hose - nylon semi rigid ⅜" - 15m	1	819	1 x **292997**
291902	1 litre SeaStar Solutions® oil	3	814	3 x **291902**
293610	Nut and olive kit	2	817	
	For extra steering station add:			
293610	Nut and olive kit	4	817	2 x **293610**
291502	Helm - Seastar® 1.7 front mount	1	812	
293604	Add a station/pilot fitting kit	1	816	
291902	1 litre SeaStar Solutions® oil	1	814	

N.B. Not suitable for Honda® engines

Single Engine - Semi-rigid hose

(Single cylinder)

Applications up to 300HP maximum.

Number of turns - 5.3

Balanced

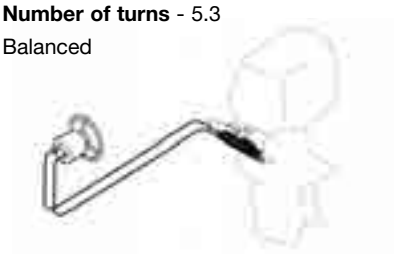

Tandem Catamaran Outboard Steering System

This balanced cylinder from SeaStar® has been specifically developed to simply and economically link twin engine installations with one common cylinder. The cylinder is ideally suited to catamarans and pod type installations.

SeaStar® have taken a standard front mount cylinder and changed the mounting configuration so that the cylinder remains stationary while the push rod actuates motor direction. The cylinder is designed to be mounted between the two engines with custom link arms connecting each rod end to the tiller arms of each engine. A ball joint fitted at either end of the push rod provides individual flexibility for the motors. The cylinder is mounted via four 5/16" UNC bolts directly to the transom or pod of the vessel.

As with all SeaStar® cylinders the bleed nipple points must be at the highest point of cylinder installation. The cylinder features an anodised alloy barrel and chromed stainless steel shaft for extended seal life.

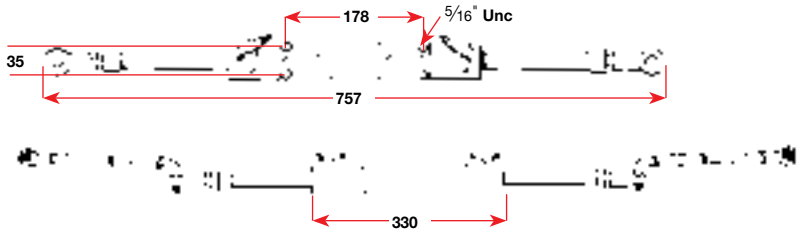

Recommended for OEM installation only

To establish whether or not this cylinder would be suitable for your application the following points should be considered:

- Fore and aft alignment of cylinder. If not mounted in-line, motors will have different turning radius
- Distance between motors
- Distance of travel in tilt arc
- Horizontal alignment of cylinder

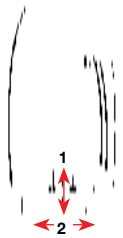

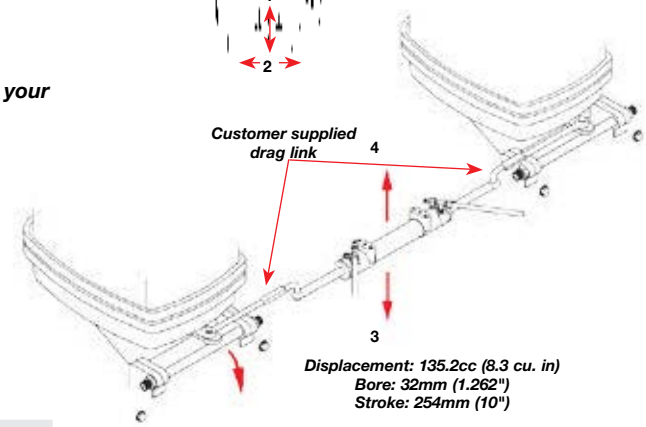

Displacement: 135.2cc (8.3 cu. in)
Bore: 32mm (1.262")
Stroke: 254mm (10")

Selecting a Tandem Catamaran Outboard Steering System

BLA Code	Kit Inclusions	Cat. Ref. Page
291608	1 x **291006** Cylinder tandem catamaran mount	815
	1 x **291502** Helm - SeaStar® 1.7 - front mount	812
	1 x **292997** Hose kit - nylon semi rigid 15m	819
	4 x **293610** Nut and olive kit	817
	3 x **291902** 1 litre SeaStar Solutions® oil	814
	2 x Custom link arms	
	For extra steering station add:	
	1 x **291502** Helm - SeaStar® 1.7 - front mount	812
	1 x **293604** Add a station/pilot fitting kit	816
	1 x **291902** 1 litre SeaStar Solutions® oil	814
	2 x **293610** Nut and olive kit	817

Dual Engines

(Single Cylinder)

Non-counter rotating applications up to 450HP maximum. Counter rotating engine applications up to 600HP maximum.

Number of turns - 4.9 Balanced

Optional Equipment

BLA Code	Description	Cat. Ref. Page
291908	Back plate kit for front mount helms	813
291906	20° wedge for front mount helms	814
291913	Round bezel kit	813
291504	Helm - SeaStar® 2.0 - front mount	812
291506	Helm - SeaStar® 2.4 - front mount	812
291508	Helm - SeaStar® 3.0 - front mount	812
291512	Helm - SeaStar® 1.7 - tilt	813
291515	Helm - SeaStar® 1.7 - sport tilt	813
291516	Helm - SeaStar® 2.4 - tilt	813
291522	Helm - SeaStar® 1.7 - rear mount	813
291526	Helm - SeaStar® 2.4 - rear mount	813
291528	Helm - SeaStar® 3.0 - rear mount	813
291540	Helm - SeaStar® 2.0 - Pro front mount	812
291542	Helm - SeaStar® 2.0 - Pro tilt	813
2930XX	Hose - Outboard	819
2931XX	Hose - SeaStar® Pro	819

N.B. Last two digits of hose number denotes length of hose in feet

Notes:
Four stroke engines that have a larger percentage of the motor overhanging the steering pivot and spin larger diameter props may be heavier to steer. SeaStar® Power Assist recommended for heavier steering load applications. Not recommended for use with installations in which:

a. Chopper, cleaver or surface-piercing propellers are used
b. The engine is highly elevated on the transom
c. Engine trim tabs have been removed
d. The boat speed exceeds 50 knots
e. The power exceeds maximum recommendations for the boat

N.B. Other influences in the boat's type, hull shape, weight, height of motor, type of propellers, engine and hull geometry have effects on the handling of the vessel. Guides within this section are typical set ups. For fitting to unusual or special combinations, please contact BLA on 1300 252 725.

Steering systems installed using a Pro Helm will require Pro hoses. Steering systems installed using outboard or Pro hose require 293602 when adding a second station/pilot.

Splashwell Mount Outboard Hydraulic Steering System

Designed to fit almost any outboard

Features:

- Fits engines with or without tilt tube as per ABYC/ NMMA/BIA standard, provided they have a ⅜" 24 UNF thread in the steering arm
- Twin axis, swivelling mount end enables cylinder to be located in most splashwells
- Anodised alloy cylinder body for reduced friction and extended seal life
- Chromed stainless steel push rod for longer seal life

Right Turn

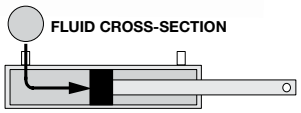

Left Turn

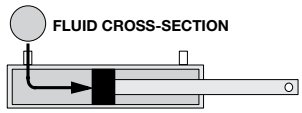

Selecting a Splashwell Mount Outboard Steering System

1. Select a compatible system configuration based on the number of engines and total engine power
2. Select the **291199** tie bar for dual engine installation
3. Select the appropriate helm and accessory hardware for each steering station
4. Select the fitting and hose kits required for the installation
5. Confirm that there is sufficient space available in the splashwell and dash areas for the steering components

N.B. Unbalanced cylinders have unequal wheel turns. When the helm is turned one turn, a certain volume of fluid is pumped into the cylinder. On one side of an unbalanced cylinder piston is the push rod, which reduces the effective cylinder volume. The cylinder area on the other side of the piston has no push rod. The rod side of the piston will move faster per turn of the wheel because less space is available for fluid than on the side with no rod. single unbalanced cylinders cannot be used in conjunction with SeaStar® Pro helm.

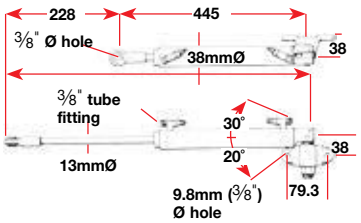

Displacement: 180.9cc (11 cu. in)
Bore: 31.7mm (1.25")
Stroke: 228mm (9")

Single Engine

BLA Code	Kit Inclusions	Cat. Ref. Page
291609	1 x **291008** Cylinder - splashwell	815
	1 x **291502** Helm - SeaStar® 1.7 - front mount	812
	1 x **292997** Hose kit - nylon semi rigid 15m	819
	4 x **293610** Nut and olive kit	817
	3 x **291902** 1 litre SeaStar Solutions® oil	814
	For extra steering station add:	
	1 x **291502** Helm - SeaStar® 1.7 - front mount	812
	1 x **293604** Add a station/pilot fitting kit	816
	1 x **291902** 1 litre SeaStar Solutions® oil	814
	2 x **293610** Nut and olive kit	817

Dual Engines

BLA Code	Description	Qty Req.	Cat. Ref. Page
291008	Cylinder - splashwell	1	815
291199	Tie bar	1	777
291502	Helm - SeaStar® 1.7 - front mount	1	812
292997	Hose kit - nylon semi rigid 15m	1	819
293610	Nut and olive kit	4	817
291902	1 litre SeaStar Solutions® oil	3	814
	For extra steering station add:		
291502	Helm - SeaStar® 1.7 - front mount	1	812
293604	Add a station/pilot fitting kit	1	816
291902	1 litre SeaStar Solutions® oil	1	814

Optional Equipment

BLA Code	Description	Cat. Ref. Page
291908	Back plate kit for front mount helms	813
291906	20° wedge for front mount helms	814
291913	Round bezel kit	813
291504	Helm - SeaStar® 2.0 - front mount	812
291506	Helm - SeaStar® 2.4 - front mount	812
291508	Helm - SeaStar® 3.0 - front mount	812
291512	Helm - SeaStar® 1.7 - tilt	813
291515	Helm - SeaStar® 1.7 - sport tilt	813
291516	Helm - SeaStar® 2.4 - tilt	813
291522	Helm - SeaStar® 1.7 - rear mount	813
291526	Helm - SeaStar® 2.4 - rear mount	813
291528	Helm - SeaStar® 3.0 - rear mount	813
2930XX	Hose - Outboard	819

N.B. Last two digits of hose number denotes length of hose in feet

Single Engine

(Single Cylinder)

Applications up to 300HP maximum.

Number of turns - 6.5
Maximum speed - 50kts

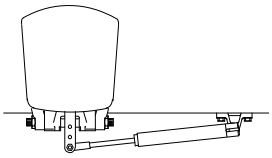

Dual Engines

(Single Cylinder)

Non-counter rotating applications up to 300HP maximum. Counter rotating engine applications up to 600HP maximum.

Number of turns - 6.5
Maximum speed - 50kts

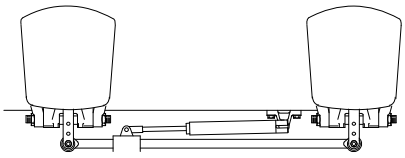

Notes:
Not recommended for use with installations in which:
a. Chopper, cleaver or surface-piercing propellers are used
b. The engine is highly elevated on the transom
c. Engine trim tabs have been removed
d. The boat speed exceeds 50 knots
e. The power exceeds maximum recommendations for the boat

N.B. Other influences in the boats type, hull shape, weight, height of motor, type of propellers, engine and hull geometry have effects on the handling of the vessel. Guides within this section are typical set ups. For fitting to unusual or special combinations, please contact BLA on 1300 252 725.

Steering systems installed using outboard hose require 293602 when adding a second station/pilot.

Stern Drive Hydraulic Steering System

SEASTAR SOLUTIONS®

SEASTAR™

It's the best choice for stern drives

SeaStar® hydraulic steering is ideally suited to most stern drives, particularly non-power assisted models. It is suited to single and multiple drives, single and multiple helms and autopilot.

Features:

- Best and most economical autopilot interface for stern drives
- Simple multiple steering station connection
- Fast easy installation
- Standard ¾" tapered steering shaft
- Optional helm displacement for quicker steering response
- Fits most power and non power assist stern drives

SeaStar® Sterndrive Cylinders

- This cylinder fits most power and non-power assist sterndrives. It can be used on single and mulitple drives with mulitple steering station connections. This cylinder features simple auto pilot interface.

Hydraulic Steering Application Guide For Stern Drives

BLA Code	Make	Steering Configuration	Engine/Drive Description	Year	Cylinder Description	Number Turns Lock to Lock		Notes
						SeaStar® I Helm	SeaStar® II Helm	
291024	BMW	Non Power Assist	All	To Date	BA135-8EMV	4.9	N/A	1
291026	BMW	Power Assist	All	To Date	125-8EM	4.9/5.8	3.4/4.1	2
291024	Mercruiser	Non Power Assist	Mercruiser 1	1983 & Prior	BA135-8EMV	4.9	3.5	1,7
291029	Mercruiser	Non Power Assist	Alpha I	1984 To Date	BA135-7EM	5	3.5	1,5,6,7
291029	Mercruiser	Non Power Assist	Bravo I	1985 To Date	BA135-7EM	5	3.5	1,5,6,7
291029	Mercruiser	Non Power Assist	Bravo II	1986 To Date	BA135-7EM	5	3.5	1,5,6,7
291029	Mercruiser	Non Power Assist	Bravo III	1987 To Date	BA135-7EM	5	3.5	1,5,6,7
291026	Mercruiser	Power Assist	Mercruiser 1	1983 & Prior	125-8EM	4.9/5.8	3.4/4.1	2
291026	Mercruiser	Power Assist	Alpha I	1984 To Date	125-8EM	4.9/5.8	3.4/4.1	2
291026	Mercruiser	Power Assist	Bravo I	1985 To Date	125-8EM	4.9/5.8	3.4/4.1	2
291026	Mercruiser	Power Assist	Bravo II	1986 To Date	125-8EM	4.9/5.8	3.4/4.1	2
291026	Mercruiser	Power Assist	Bravo III	1987 To Date	125-8EM	4.9/5.8	3.4/4.1	2,8
N/A	OMC	Non Power Assist	400/800 Series	1985 & Prior	N/A	N/A	N/A	
291030	OMC	Non Power Assist	Cobra	1986 To Date	BA150-7EM	6	N/A	1,4
291030	OMC	Non Power Assist	King Cobra	1986 To Date	BA150-7EM	6	N/A	1,4
N/A	OMC	Power Assist	400/800 Series	1986 & Prior	N/A	N/A	N/A	
291026	OMC	Power Assist	Cobra	1986 To Date	125-8EM	4.9/5.8	3.4/4.1	2
291026	OMC	Power Assist	King Cobra	1986 To Date	125-8EM	4.9/5.8	3.4/4.1	2
291029	Volvo	Non Power Assist	275	To Date	BA135-7ATM	6	N/A	1,7
291029	Volvo	Non Power Assist	280	To Date	BA135-7EM	5	3.5	1,5,6,7
291029	Volvo	Non Power Assist	290	To Date	BA135-7EM	5	3.5	1,5,6,7
291029	Volvo	Non Power Assist	Diesel	To Date	BA135-7EM	5	3.5	1,5,6,7
N/A	Volvo	Power Assist	D275	To Date	N/A	N/A	N/A	
291026	Volvo	Power Assist	280	To Date	125-8EM	4.9/5.8	3.4/4.1	2
291026	Volvo	Power Assist	290	To Date	125-8EM	4.9/5.8	3.4/4.1	2
291022	Volvo	Power Assist	Diesel	To Date	125-8VEM	4.9/5.8	3.4/4.1	2
291026	Volvo	Power Assist	"32, Diesel"	1997 To Date	92-VPS	4.9/5.5	3.4/4.1	2
291026	Volvo	Power Assist	"41-42, Diesel"	1998 To Date	92-VPS	4.9/5.8	3.4/4.1	2
N/A	Yanmar	Non Power Assist	All	1989 To Date	N/A	N/A	N/A	
291026	Yanmar	Power Assist	All	1989 To Date	125-8EM	4.9/5.8	3.4/4.1	2

Notes

1. Balanced system- number of turns lock-to-lock is equal port to starboard or vice versa
2. Unbalanced system - number of turns lock-to-lock is unequal port to starboard or vice versa
3. Requires additional clevis supplied by engine manufacturer. Reference Quicksilver part No. B98735A1
4. Requires cylinder rod end adapter HA5424 supplied by SeaStar Solutions®
5. 291029 replaces cyclinder 291030 as from January 2000. If installing 291030 additional clevis supplied by engine manufacturer required (part number B98735A1)
6. The installation of the 291029 sterndrive cylinder requires the use of SeaStar® Outboard hose only. DO NOT use ⅜" copper or nylon tube.
7. If engine outdrive is NOT equipped with a torque tab on the underside of the lower leg one must be installed to reduce prop torque.
8. Yanmar Engines using the Bravo III drives require the use of cylinder 291030.

Selecting SeaStar® Stern Drive Hydraulic Steering

From the application guide on the previous page, confirm that a cylinder is available for your specific make, model and year of drive unit. Select the cylinder that is appropriate for the drive.

Select the appropriate helm and accessory hardware. Note that one size displacement helm pump is available for non-power steered stern drives and two sizes for power steered stern drives. The displacement of the helm affects the number of turns lock-to-lock. Select the helm size on the basis of the desired steering response. Lower helm displacement = more turns, less effort/slower response.

Select the appropriate tube/hose and fitting kits.

Confirm that there is sufficient space available in the dash and engine compartments for the steering components.

Single Engine

BLA Code	Description	Qty Req.	Cat. Ref. Page
2910XX	Cylinder - stern drive	1	784
291502	Helm - SeaStar® 1.7 (see note 1)	1	812
291506	Helm - SeaStar® 2.4 (see note 2)		812
292997	Hose kit - nylon semi rigid 15m (see note 3)	1	819
291902	1 litre SeaStar Solutions® oil	3	814
293610	Nut and olive kit	4	817
	For extra steering station add:		
291502	Helm - SeaStar® 1.7 (see note 1)	1	812
291506	Helm - SeaStar® 2.4 (see note 2)		812
293604	Add a station/pilot fitting kit (see note 4)	1	816
291902	1 litre SeaStar Solutions® oil	1	814
293610	Nut and olive kit	2	817

Dual Engines

BLA Code	Description	Qty Req.	Cat. Ref. Page
2910XX	Cylinder - stern drive	1	784
291198	Tie bar (motor manufacturers tie bar may be substituted)	1	777
291502	Helm - SeaStar® 1.7 (see note 1)	1	812
291506	Helm - SeaStar® 2.4 (see note 2)		812
292997	Hose kit - nylon semi rigid 15m (see note 3)	1	819
291902	1 litre SeaStar Solutions® oil	4	814
293610	Nut and olive kit	2	817
	For extra steering station add:		
291502	Helm - SeaStar® 1.7 - front mount	1	812
291506	Helm - SeaStar® 2.4 (see note 2)		812
293604	Add a station/pilot fitting kit (see note 4)	1	816
291902	1 litre SeaStar Solutions® oil	1	814
293610	Nut and olive kit	4	817

Optional Equipment

BLA Code	Description	Cat. Ref. Page
291908	Back plate kit for front mount helms	813
291906	20° wedge for front mount helms	814
291913	Round bezel kit	813
291504	Helm - SeaStar® 2.0 - front mount	812
291508	Helm - SeaStar® 3.0 - front mount	812
291512	Helm - SeaStar® 1.7 - tilt	813
291515	Helm - SeaStar® 1.7 - sport tilt	813
291516	Helm - SeaStar® 2.4 - tilt	813
291522	Helm - SeaStar® 1.7 - rear mount	813
291526	Helm - SeaStar® 2.4 - rear mount	813
291528	Helm - SeaStar® 3.0 - rear mount	813
2930XX	Hose - Outboard	819
2931XX	Hose - Pro	819

N.B. These recommendations apply to factory stock stern drives only. Modified installations may require a higher capacity steering system. Other influences in the boat's type, hull shape, weight, height of motor, type of propellers, engine and hull geometry have effects on the handling of the vessel. Guides within this section are typical set ups. For fitting to unusual or special combinations, please contact BLA on 1300 252 725.

Notes:

1. *SeaStar® 1.7 helms are the standard recommended helm for both non-power and power steered applications.*
2. *SeaStar® 2.4 helms can be specified for power steered applications in which faster steering response is desired. Contact our sales department for recommendations.*
3. *For SeaStar® 1.7 systems use 3/8" diameter nylon tubing part number 292997 plus two 293610 nut and olive kits. For SeaStar® 2.4 systems use the following options:*
   a. Outboard hose 2930xx available in 305mm (1ft) increments from 600mm (2ft) to 12m (40ft), last two digits denote hose length in feet.
   b. SeaStar® Pro hose 2931xx available in 305mm (1ft) increments from 600mm (2ft) to 12m (40ft), last two digits denote hose length in feet.
   c. Copper tube: 3/8" diameter copper tube and hose kit part number 293202.
4. *Steering systems installed using outboard or Pro hose require kit 293602 when adding second station/pilot.*

291022

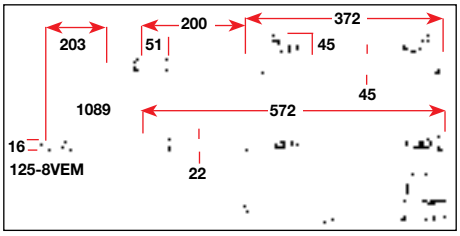

291024

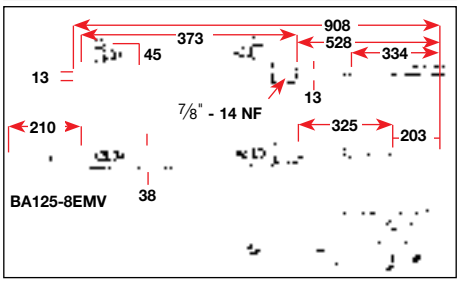

291026

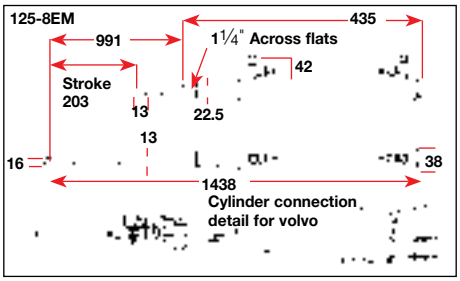

Cylinder connection detail for OMC & Mercruiser

291028

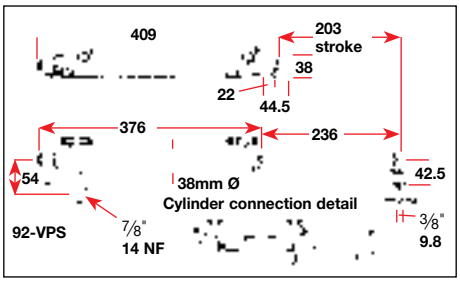

291029

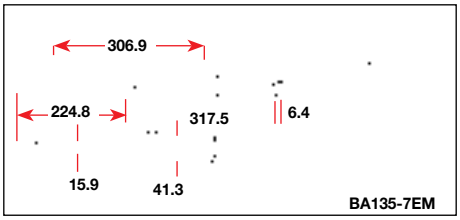

291030

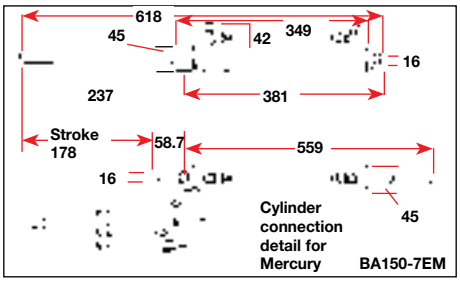

291064

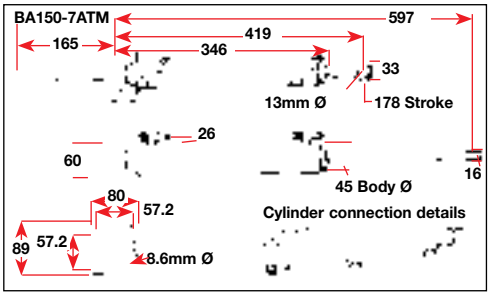

Inboard Hydraulic Steering

No other manual hydraulic steering system gets you closer to power steering than SeaStar®

Unmatched comfort and control. Only with SeaStar® steering. The most popular inboard hydraulic steering system offers smooth, super efficient steering designed for today's inboard powered vessels to 15 metres. It's the first choice of leading OEMs, with a wide range of helm and cylinder displacements to cover most applications.

Features:

- Easy installation for single and dual rudder vessels
- Easy connection of additional helms
- Easy autopilot interface
- Bronze or anodised alloy cylinders and chromed stainless steel push rods for reduced friction, smoother action and extended life of seals
- Compact helm, only 113mm footprint, 75mm dash cut out
- Meets NMMA/ABYC/BIA standards

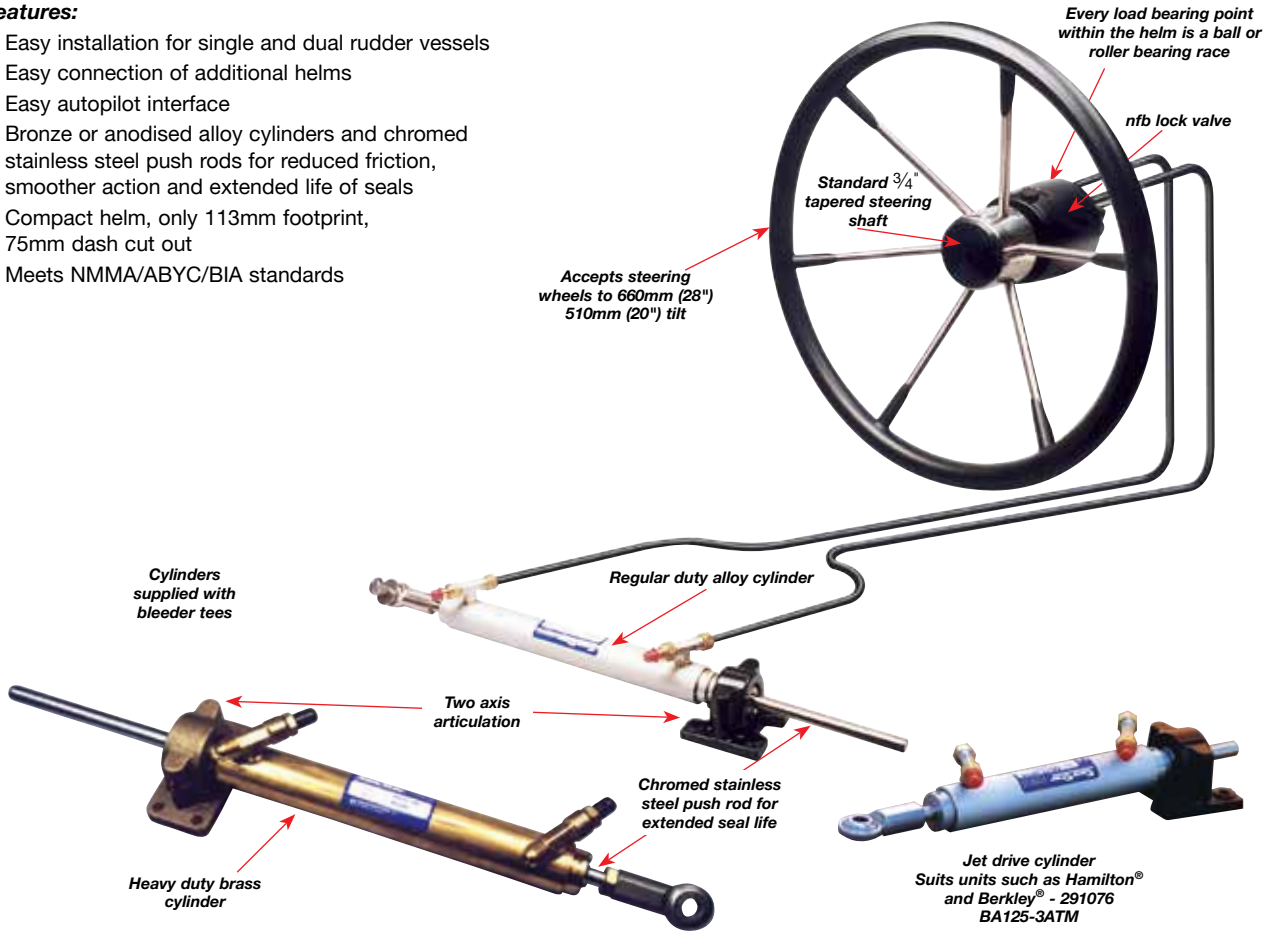

Selecting an Inboard Hydraulic Steering System

From the order guide (opposite page) select the system number appropriate for the vessel based on:

a. Hull type - displacement or planing
b. Length of vessel
c. Number of engines/rudders
d. Usage of vessel

Select the optional helms and accessory hardware for each steering station.

From the order guide (opposite page) select the fitting and hose kits required for the installation.

Confirm that you have sufficient space available in the dash and engine compartments for the steering components.

Alternatively, you can order one of our complete steering systems. These systems contain a helm, cylinder, hose or tubing and oil. (As detailed in the right hand column of the order guide).

Inboard Steering Application Guide

Boat Length Up To		Planing Hull				Displacement Hull				Sail	
		Single Engine		Twin Engine		Single Engine		Twin Engine		Single Engine	
M	Ft	Pleasure	Work	Pleasure	Work	Pleasure	Work	Pleasure	Work	Pleasure	Work
8	26	1	4	1	4	2	4	2	4	4	4
10	32	2	4	1	4	3	4	3	4	4	4
11.5	38	3	5	2	5	5	5	3	5	4	5
13.5	44	5	-	3	5	-	-	5	-	5	-
15	50	-	-	5	-	-	-	-	-	-	-

Please contact BLA sales on 1300 252 725 for further specifications. N.B. If your requirements fall outside these parameters please refer pages 791-793.

Inboard Hydraulic Steering Order Guide

SEASTAR™

1 *4 turns lock-to-lock - Torque 57.9 kg-m (5025 in-lb)*

BLA Code	Kit Inclusions	Cat. Ref. Page
291620	1 x **291060** Cylinder - BA125-7ATM - alloy	815
	1 x **291502** Helm - *SeaStar® 1.7 - front mount	812
	3 x **291902** 1 litre SeaStar Solutions® oil	814
	1 x **292997** Tube - ⅜" dia nylon (see note 1 & 3)	819
	4 x **293610** Nut & olive kit	817
	For extra steering station add:	
	1 x **291502** Helm - SeaStar® 1.7 - front mount	812
	1 x **293604** Add a station/pilot fitting kit	816
	1 x **291902** 1 litre SeaStar Solutions® oil	814
	2 x **293610** Nut and olive kit	817

2 *5 turns lock-to-lock - Torque 66.1 kg-m (5741 in-lb)*

BLA Code	Kit Inclusions	Cat. Ref. Page
291622	1 x **291062** Cylinder - BA135-7ATM - alloy	815
	1 x **291502** Helm - *SeaStar® 1.7 - front mount	812
	3 x **291902** 1 litre SeaStar Solutions® oil	814
	1 x **292997** Tube - ⅜" dia nylon (see note 1 & 3)	819
	4 x **293610** Nut & olive kit	817
	For extra steering station add:	
	1 x **291502** Helm - SeaStar® 1.7 - front mount	812
	1 x **293604** Add a station/pilot fitting kit	816
	1 x **291902** 1 litre SeaStar Solutions® oil	814
	2 x **293610** Nut and olive kit	817

3 *6 turns lock-to-lock - Torque 82.0 kg-m (7117 in-lb)*

BLA Code	Kit Inclusions	Cat. Ref. Page
291624	1 x **291064** Cylinder - BA150-7ATM - alloy	815
	1 x **291502** Helm - *SeaStar® 1.7 - front mount	812
	3 x **291902** 1 litre SeaStar Solutions® oil	814
	1 x **292997** Tube - ⅜" dia nylon (see note 1 & 3)	819
	4 x **293610** Nut & olive kit	817
	For extra steering station add:	
	1 x **291502** Helm - SeaStar® 1.7 - front mount	812
	1 x **293604** Add a station/pilot fitting kit	816
	1 x **291902** 1 litre SeaStar Solutions® oil	814
	2 x **293610** Nut and olive kit	817

4 *4¼ turns lock-to-lock - Torque 82.0 kg-m (7117 in-lb)*

BLA Code	Kit Inclusions	Cat. Ref. Page
291626	1 x **291066** Cylinder - BA150-7ATM - brass	815
	1 x **291506** Helm - **SeaStar® 2.4 - front mount	812
	3 x **291902** 1 litre SeaStar Solutions® oil	814
	1 x **293202** Hose kit	816
	Copper tube - ⅜" dia (see note 2 & 3)	
	For extra steering station add:	
	1 x **291506** Helm - SeaStar Solutions® 2.4 - front mount	812
	1 x **293604** Add a station/pilot fitting kit	816
	1 x **291902** 1 litre SeaStar Solutions® oil	814
	Extra tube as above (see note 1 & 3)	

5 *5½ turns lock-to-lock - Torque 110.2 kg-m (9569 in-lb)*

BLA Code	Kit Inclusions	Cat. Ref. Page
291628	1 x **291068** Cylinder - BA175-7TM - brass	815
	1 x **291506** Helm - **SeaStar® 2.4 - front mount	812
	3 x **291902** 1 litre SeaStar Solutions® oil	814
	1 x **293202** Hose kit	816
	Copper tube - ⅜" dia (see note 2 & 3)	
	For extra steering station add:	
	1 x **291506** Helm - SeaStar Solutions® 2.4 - front mount	812
	1 x **293604** Add a station/pilot fitting kit	816
	1 x **291902** 1 litre SeaStar Solutions® oil	814
	Extra tube as above (see note 1 & 3)	

Aluminium Cylinders

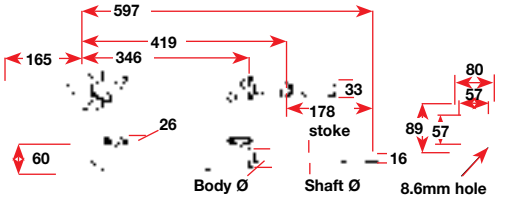

Brass Cylinders

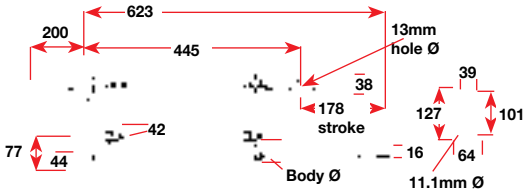

Aluminium Jet Drive Cylinder
291076

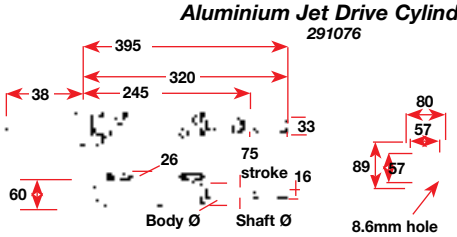

Cylinder Dimensions Specific To Model

Cylinder Body	Body Dia.	Shaft Dia.
291060	35mm 1.38'	12.7mm
291062	38mm 1.5'	15.9mm
291064	38mm 1.5'	15.9mm
291066	38mm 1.5'	15.9mm
291068	45mm 1.75'	19.1mm
291076	38mm 1.5'	15.9mm

BLA Code	Optional Equipment
291908	Back plate kit for front mount helms
291906	20° wedge kit for front mount helms
293604	Autopilot fitting kit for all helms
291508	Helm - SeaStar® 3.0 - front mount
291512	Helm - SeaStar® 1.7 - tilt
291515	Helm - Seastar® 1.7 - sport tilt
291516	Helm - SeaStar® 2.4 - tilt
291522	Helm - SeaStar® 1.7 - rear mount
291526	Helm - SeaStar® 2.4 - rear mount
291528	Helm - SeaStar® 3.0 - rear mount
291540	Helm - SeaStar® 2.0 - Pro front mount
291542	Helm - SeaStar® 2.0 - Pro tilt
2930XX	Hose - Outboard (see note 3)
2931XX	Hose - SeaStar® pro (see note 3

Notes:

1. *For systems 1, 2 & 3 nylon semi-rigid tubing (⅜" diameter) is the standard requirement for plumbing the system. Copper tubing (⅜" diameter) can be substituted, but fitting kit 293202 is required.*
2. *For systems 4 & 5 copper tubing (⅜" diameter) is the standard requirement for plumbing the system. Fitting kit 293202 is required.*
3. *For systems 1, 2, 3, 4 & 5 SeaStar® outboard or Pro hose can be substituted for nylon or copper tubing. These hoses are available in 305mm (1ft) increments from 600mm (2ft) to 12m (40ft). Refer to page 819.*
4. *Steering systems installed using outboard or Pro hose require kit 293602 when adding a second station.*

N.B. Other influences in the boat's type, hull shape, weight, type of propellers, engine and hull geometry have effects on the handling of the vessel. Guides within this section are typical set ups. For fitting to unusual or special combinations, please contact BLA on 1300 252 725.

Capilano Hydraulic Steering Systems

SEASTAR SOLUTIONS

CAPILANO™

The uncompromising SeaStar® design philosophy is reflected in the Capilano™ 1250V and 1275V steering systems, known worldwide for their ruggedness and reliability.

Helm pumps feature variable displacement which enables the helmsman to adjust the steering wheel turns to suit various manoeuvring and weather conditions. The pumps have internal lock valves to prevent rudder feedback.

Features:

- Variable displacement helms - adjustable steering wheel turns
- Heavy duty brass cylinders
- Easy installation for single and dual rudder vessels
- Cylinders supplied with bleeder fittings
- Systems are not air pressurised: no air leaks or pressure drops
- Each helm is its own reservoir: separate reservoir not required
- Built in pressure relief valve in helm protects system from the effects of thermal expansion
- Meets ABS, Lloyds and Det Norske Veritas specifications
- Standard ¾" taperd steering shaft

Applications:

- Most inboard powered boats with single or twin engines and sail boats
- Vessels from 9m (30ft) to 17m (55ft)

N.B. Capilano™ systems use ATF type A or Dexron III. Power steering available ref pages 791-793..

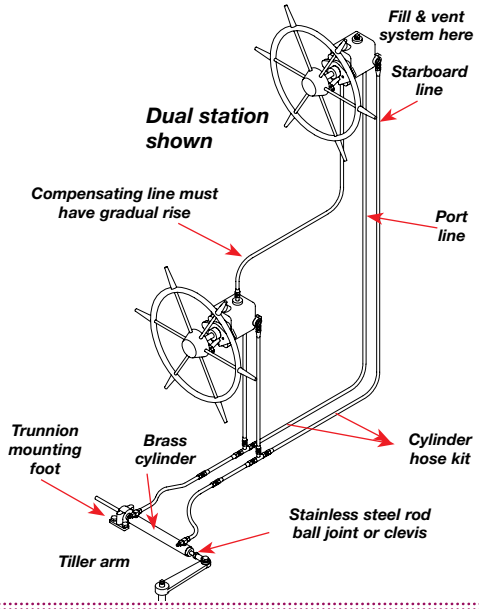

Selecting a Capilano™ Steering System

From the selection guide, select the system number appropriate for the vessel based on:
a. hull type - displacement or planing
b. length of vessel
c. number of engines/rudders
d. usage of vessel

From the selection guide, select the fittings and hose kits required for the installation

Confirm that you have sufficient space available in the:
a. area the cylinder is to be mounted
b. dash area for the helm components

Capilano™ Helm Pumps

CAPILANO™

The Capilano™ helm pump is a heavy duty axial piston pump specifically designed for manual steering. Every load bearing point within the helm pump runs on either a roller or ball bearing race for super low friction and smooth, positive steering. It has a built-in lock valve to prevent the steering load from feeding back to the helm. The lock valve will not allow the rudder or drive unit to move until you move the steering wheel. The valve section of the helm also includes a relief valve. This relief valve provides over-pressure protection for mechanical components and hydraulic lines. Industrial yellow baked enamel, cast alloy housing.

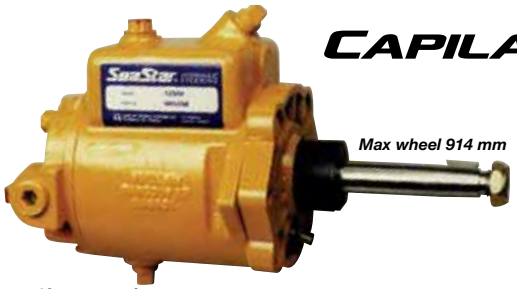

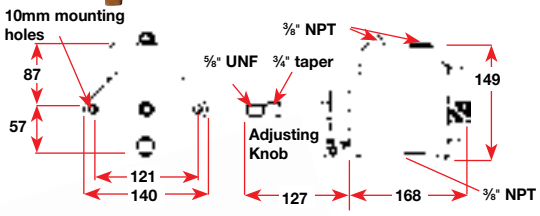

BLA Code	Model	Displacement cc	Displacement cu in	Relief Valve bar	Relief Valve psi
294002	1250V	27.8-55.7	1.7-3.4	70	1000
294004	1275V	44.2-88.4	2.7-5.4	70	1000

Capilano™ Cylinders

CAPILANO™

Capilano™ cylinders feature brass barrels for reduced friction and longer seal life than stainless steel barrels. Heavy duty cast bronze trunnion mount. Chrome plated stainless steel push rod for extended seal life. Available with stainless steel rod end ball joints (TMB models) or clevis (TMC model). Cylinders with ball joints have two axis articulation. We recommend use of copper tubing for optimum performance.

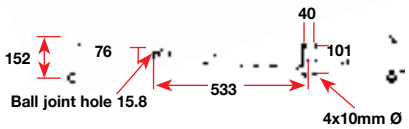

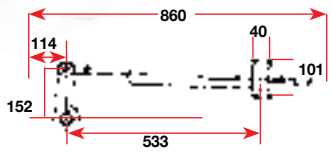

Clearances required for balanced 7" stroke cylinder model

BLA Code	Cylinder Model	Rod End	Bore Dia. mm	Bore Dia. in	Shaft Dia. mm	Shaft Dia. in	Stroke mm	Stroke in	Area cm^2	Area in^2	Volume cc	Volume in^3	Torque kg-m	Torque in-lb
294032	BA150-7TMB	Ball joint	38.1	1.50	15.9	.625	178	7	9.4	1.46	167.5	10.2	82.07	7117
294034	BA175-7TMB	Ball joint	44.4	1.75	19	.75	178	7	12.7	1.96	225.4	13.7	110.2	9569
294036	BA200-7TMB	Ball joint	50.8	2.00	19	.75	178	7	20.2	3.14	310.0	18.9	151.0	13200
294038	BA200-7TMC	Clevis	50.8	2.00	19	.75	178	7	20.2	3.14	310.0	18.9	151.0	13200

N.B. Theoretical torque about pivot point at 35° articulation with 70 bar (1000 psi) system pressure and a 153mm centre to centre tiller arm length cylinder volume divided by helm displacement = number of turns lock-to-lock

Capilano™ Inboard Steering Selection Guide

CAPILANO™

The table below is a guide to selecting a steering system. A steering system manufacturer cannot anticipate all the variables in boat and rudder design that affect steering loads. It is the final responsibility of the boat designer / builder to specify maximum expected steering loads.

If expected steering load information is not available, contact our sales department with rudder dimensions, vessel size and anticipated maximum vessel speed.

Boat Length Up To M	Ft	Planing Hull	Displacement Hull	Sailboat
9	30	1	1	1
11	35	1	2	2
11.5	38	2	2	2
12	40	2	3	3
14	45	3	3 or 4 or 5	3 or 4 or 5
15	50	3 or 4 or 5	6	6
17	55	6	7	7
18	60	7		

Displacement hull - maximum hull speed does not normally exceed 18 knots
Planing hull - maximum hull speed normally exceeds 18 knots

1 3-6 turns lock to lock adjustable - torque 75 kg-m (6548 in-lb)

BLA Code	Description	Qty Req.	Cat. Ref. Page
294002	Helm - 1250V	1	788
294032	Cylinder - BA150-7TMB	1	788
293096	Hose kit	1	790
294102	Fitting kit	1	790
	For extra steering station add:		
294002	Helm - 1250V	1	788
294104	Fitting kit	1	790

2 4-8 turns lock to lock adjustable - torque 100 kg-m (8795 in-lb)

BLA Code	Description	Qty Req.	Cat. Ref. Page
294002	Helm - 1250V	1	788
294034	Cylinder - BA200-7TMB	1	815
293096	Hose kit	1	790
294102	Fitting kit	1	790
	For extra steering station add:		
294002	Helm - 1250V	1	788
294104	Fitting kit	1	790

3 5.5-11 turns lock to lock adjustable - torque 140 kg-m (12,134 in-lb)

BLA Code	Description	Qty Req.	Cat. Ref. Page
294002	Helm - 1250V	1	788
294034	Cylinder - BA200-7TMB	1	815
293096	Hose kit	1	790
294102	Fitting kit	1	790
	For extra steering station add:		
294002	Helm - 1250V	1	788
294104	Fitting kit	1	790

4 3.5-7 turns lock to lock adjustable - torque 140 kg-m (12,134 in-lb)

BLA Code	Description	Qty Req.	Cat. Ref. Page
294002	Helm - 1250V	1	788
294036	Cylinder - BA200-7TMB	1	788
293096	Hose kit	1	790
294106	Fitting kit	1	790
	For extra steering station add:		
294002	Helm - 1250V	1	788
294108	Fitting kit	1	790

5 4-8 turns lock to lock adjustable - torque 170 kg-m (14,766 in-lb)

BLA Code	Description	Qty Req.	Cat. Ref. Page
294004	Helm - 1275V	1	788
294032	Cylinder - BA150-7TMB	1	788
293096	Hose kit	1	790
294106	Fitting kit	1	790
	For extra steering station add:		
294004	Helm - 1275V	1	788
294108	Fitting kit	1	790

6 5.5-11 turns lock to lock adjustable - torque 230 kg-m (19,902 in-lb)

BLA Code	Description	Qty Req.	Cat. Ref. Page
294004	Helm - 1275V	1	788
294034	Cylinder - BA175-7TMB	2	815
293096	Hose kit	2	790
294106	Fitting kit	1	790
	For extra steering station add:		
294004	Helm - 1275V	1	788
294108	Fitting kit	1	790

7 7.5-15 turns lock to lock adjustable - torque 300 kg-m (26,322 in-lb)

BLA Code	Description	Qty Req.	Cat. Ref. Page
294004	Helm - 1275V	1	788
294036	Cylinder - BA200-7TMB	2	788
293096	Hose kit	2	790
294106	Fitting kit	1	790
	For extra steering station add:		
294004	Helm - 1275V	1	788
294108	Fitting kit	1	790

N.B. Torque figures are theoretical about pivot point at 35º articulation with 75 bar (1000 psi) system pressure and 153mm centre to centre tiller arm length

Capilano™ Seal Kits

CAPILANO™

BLA Code	Description
293745	1250V & 1275V helms
293726	BA150-7TMB, BA150-7TMC cylinders
293728	BA175-7TMB, BA175-7TMC cylinders
293730	BA200-7TMB, BA200-7TMC to 200- 7TMB cylinders
293732	200-11TMC, BA200-11TMC cylinders

Refer page 788 for further details.

Capilano™ Steering - Recommended Tubing/Hoses

CAPILANO™

We recommend the use of soft refrigeration type copper tubing for optimum performance. If hose must be used, select a hydraulic hose rated for 70 bar (1000 psi) working pressure and with a very low volumetric expansion rating. Hydraulic hose that expands too much will make the steering spongy. Steering systems installed with copper tubing require short lengths of flexible hose to accommodate cylinder movement. Hoses are supplied with ½" SAE flare nuts on each end. Hoses are sold as pairs for single cylinder applications.

BLA Code	Length mm
293096	450

Recommended Copper Tube Size for Capilano

Helm Model	Distance from cylinder to furthest helm: 12.2m (40ft) or less	More than 12.2m (40ft)
1250V	½" OD copper tubing ½" ID hydraulic hose	⅝" OD copper tubing ⅝" ID hydraulic hose
1275V	⅝" OD copper tubing ⅝" ID hydraulic hose	⅝" OD copper tubing ⅝" ID hydraulic hose

Capilano™ Fitting Kits

Single and additional steering station. SAE flare tube fitting kits for use with ½" O.D. and ⅝" O.D. copper tubing.

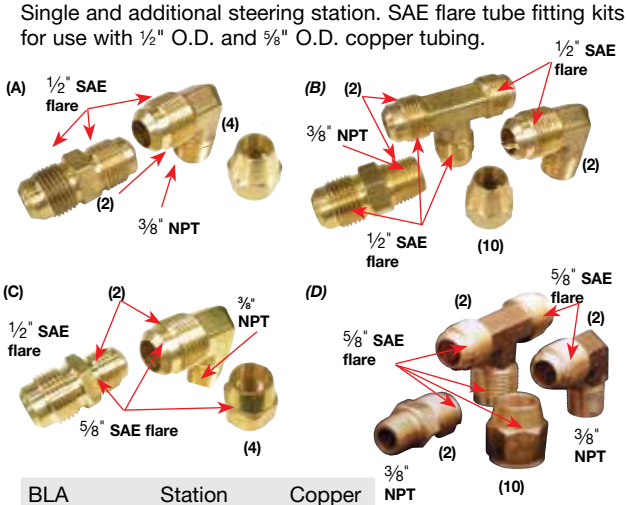

BLA Code	Station	Copper Tubing
(A) **294102**	Single	½"
(B) **294104**	Additional	½"
(C) **294106**	Single	⅝"
(D) **294108**	Additional	⅝"

Synchronisation Valves

Used to align fluid linked twin cylinders. Brass ball valve. Supplied with brass tees and flare nuts.

BLA Code	Description
294128	½" synchronisation valve

Purging Valves

Strongly recommended for assisting with the purging of dual station Capilano systems.

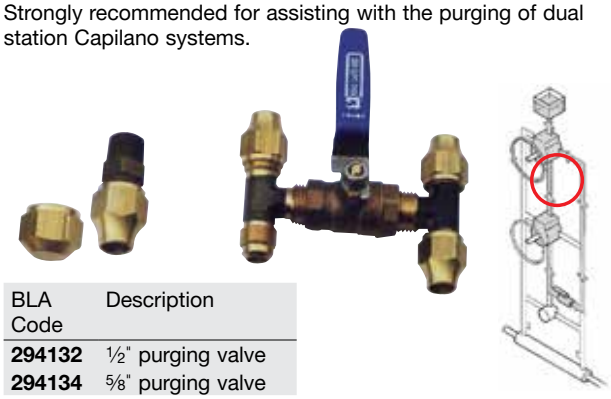

BLA Code	Description
294132	½" purging valve
294134	⅝" purging valve

Flare Nuts

Brass. SAE thread. Sold individually.

BLA Code	Description
294110	½" Flare nut
294112	⅝" Flare nut

Capilano™ Cylinder Bleed 'T'

Brass. Two per kit.

BLA Code	Description
294122	⅜" NPT ½" SAE flare
294123	⅜" NPT ½" tube

Capilano™ 'T' - Brass

Three per kit. ½" SAE flare.

BLA Code
294124

Capilano™ 'T' Two Way Flare - Brass

Tee Two way flare ½" BSP Male.

BLA Code
294126

Fill & Vent Plug Kit

This kit facilitates filling and purging of the steering system at a more convenient, accessible area than at the helm pump. A through-dash fitting complete with a waterproof vent plug, 450mm (18") of vinyl tube and elbow fittings are supplied with this kit. Suits Capilano and SeaStar® rear mount or sport tilt helm.

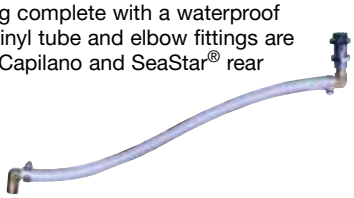

BLA Code
294130

Adaptor Bush

Adapts Capilano™ helm shafts from ¾" taper to 1" straight. Machined brass.

BLA Code
294100

SeaStar® Hydraulic DC Power Steering System

Developed for use in today's large, high powered luxury vessels and commercial craft where ease of operation and reliability are paramount. SeaStar® Power Steering Systems provide the ultimate in simplicity, safety, reliability and performance.

The DC Power Steering unit provides super responsive automotive style steering performance in larger style vessels. The DC Power Steering unit is the heart of the system providing reliable and economical hydraulic flow to the steering cylinders whenever the wheel is turned. Whether at slow docking speeds or on the plane, the system will deliver 100% power regardless of engine speed.

The SeaStar® Power Steering Cylinder delivers precise rudder control in all conditions using the vessels power supply via an electrically operated motor driven hydraulic pump, in the SeaStar® Power Steering unit. Refer to page 793 for details of the cylinder.

A SeaStar® 1.7 helm is recommended, resulting in a system with 3.5 wheel turns lock to lock when installed in conjunction with the 295112 cylinder.

A **295090** in-line oil filter is recommended to help protect the steering system components against contaminants, refer to page 811 for details.

Features:

- Highly responsive, effortless steering performance at all speeds
- Low number of turns lock to lock (based on helm selection)
- Few components to spec and install
- Multiple steering stations can be installed
- Semi-auto purge feature
- Suitable for multi-station applications
- Integrated autopilot pump for easy autopilot interface
- Easy autopilot interface
- Automatic manual back-up steering
- Suitable for use with most SeaStar® helms (including tilt versions)
- Meets A.B.Y.C./NMMA. standards
- DC Power Unit Specifications:
- Peak Current Draw @ 1250 psi: 72 amps
- Idle Current Draw: 0.2 amps max
- Average Current Draw: 10-12 amps
- Weight: 25kg (55lbs) (Dry weight)
- Tank Capacity: 7 Litres
- Adjustable Flow Autopilot: 0-60 in³/min (984cc)

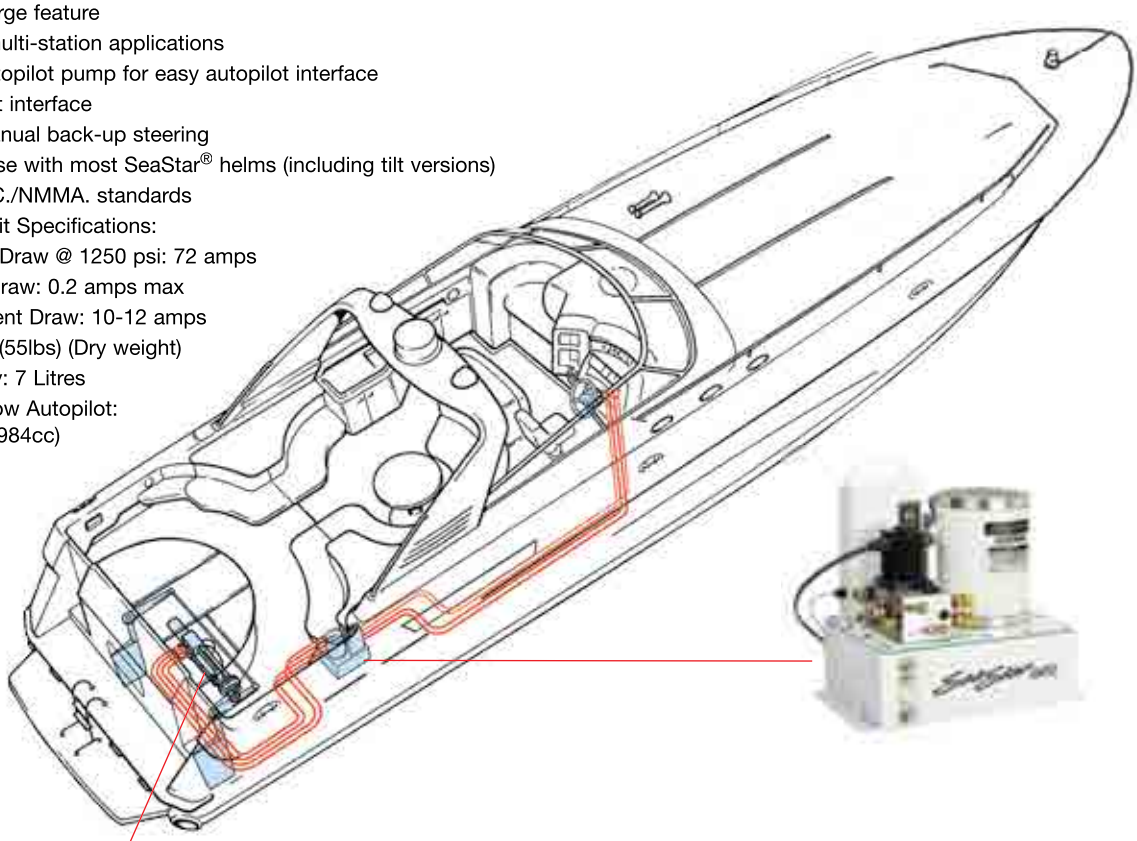

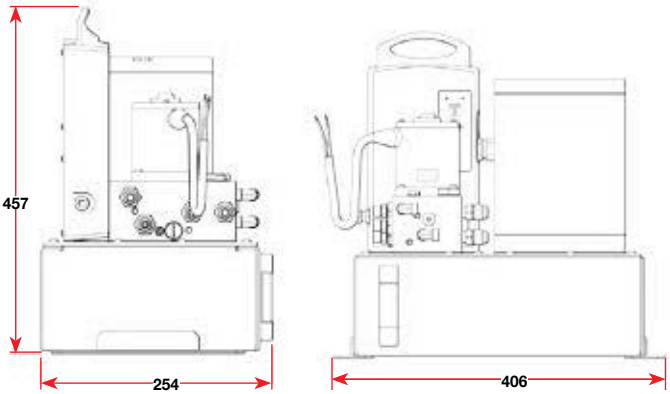

BLA Code	Description
295102	24 vdc main motor / 12 vdc autopilot motor
295104	24 vdc main motor / 24 vdc autopilot motor

SeaStar Power Steering For boats up to 30m

SeaStar® hydraulic power steering uses the ship's engine(s) to provide the 'power' for the steering system, via an engine or gear box driven hydraulic pump.

A manual hydraulic steering system, comprising of a standard SeaStar® helm and a hydraulic steering cylinder (fitted with an integral servo cylinder and power steering valve), supplies the 'control' portion of the steering system. Under normal conditions, with engines running, a hydraulic oil supply is in stand-by mode, ready to be directed to the steering cylinder as dictated by the steering wheel, servo cylinder and power steering valve. Turning the steering wheel port or starboard makes the system go from standby into operating mode and move the steering cylinder accordingly. In the event of a power source failure, hydraulic oil from the steering helm is automatically diverted directly into the servo and steering cylinder, providing the helmsman with manual hydraulic back-up steering. An engine room mounted oil reservoir allows easy system fill and assists the in-line oil cooler in cooling the hydraulic oil. An in-line oil filter helps to protect the steering system components against contaminants.

Features:

- Effortless steering from docking to top speed
- Responsive steering - 3.5 turns lock-to-lock 1.7 helm
- Automatic manual hydraulic back up steering
- Simplified installation
- Multiple steering stations options
- Easy autopilot interface
- Rubber boot on cylinders to protect seals

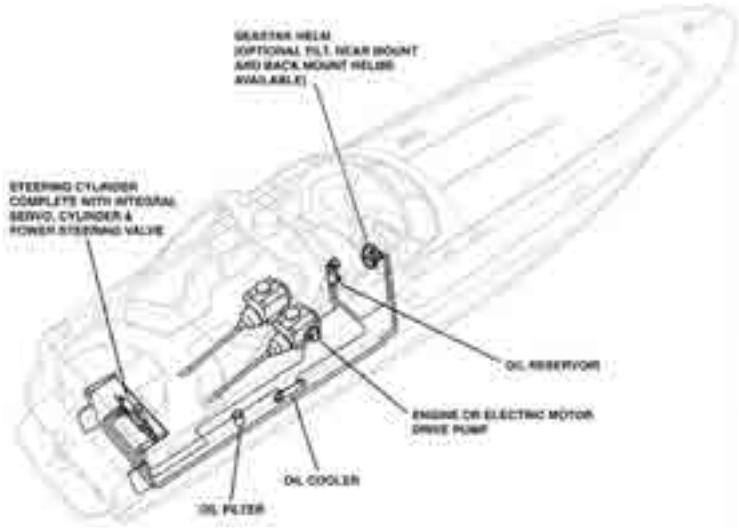

Selecting a Power Steering System For Inboard Powered Boats

A SeaStar® power steering system comprises of seven component types.

From the cylinder selection guide select the cylinder appropriate for the vessel based on:

a. hull type - displacement or planing

b. weight of vessel

c. length of vessel

Select a power steering pump based on type of power take off and direction of rotation.

Select a steering helm based on:

a. number of turns required lock-to-lock

b. type of helm configuration/mount and accessory hardware for each steering station

Select the appropriate oil cooler based on engines cooling system capacity.

Select the fittings and hose kits required for the application.

To complete the SeaStar® power steering system you will also require an oil reservoir (**295070**) and oil filter (**295090**).

Standard Power Steering System Selection Information

BLA Code	Description
Power Steering Cylinder	
295002	228mm (9") stroke
295004	279mm (11") stroke
295006	228mm (9") stroke, additional cylinder option
295008	279mm (11") stroke, additional cylinder option
Steering Helm	
291502	Helm, 1.7 front mount
291512	Helm, 1.7 tilt mount
291515	Helm, 1.7 sport tilt mount
291522	Helm, 1.7 rear mount
Oil Reservoir, cooler, and filter	
295070	Oil reservoir
295090	Oil filter
295082	Oil cooler

SeaStar Power Steering - Cylinder Selection Guide

BLA Code	Description	Displacement Hulls (Standard)	Displacement Hulls (Heavy Duty)	Planing Hulls
295002	Single cylinder	up to 15m (50')	up to 12m (40')	up to 20m (65')
295004	Single cylinder	up to 18m (60')	up to 15m (50')	up to 23m (75')
295112	Single cylinder	up to 26m (85')	up to 18m (60')	up to 31m (100')
***295006**	Secondary cylinder without servo	up to 23m (75')	up to 17m (55')	up to 26m (85')
****295008**	Secondary cylinder without servo	up to 31m (100')	up to 22m (70')	up to 34m (110')

** 295006 secondary cylinder is installed with 295002 primary cylinder*
*** 295008 secondary cylinder is installed with 295004 primary cylinder*

SeaStar Power Steering - Technical Data

BLA Code	Description	Displacement	Bore	Stroke	Output Force	Max torque (35° from centre)
295002	Single cylinder	348cc (21.25 in³)	51mm (2")	229mm (9")	13 090 N 2946 lbsf	2130 Nm (18 900 in lbs)
295004	Single cylinder	426cc (26.00 in³)	51mm (2")	280mm (11")	13 090 N 2946 lbsf	2610 Nm (23 140 in lbs)
295112	Single cylinder	608cc (37.11 in³)	64mm (2.5")	229mm (9")	22 926 N 5154 lbsf	3735 Nm (33 065 in lbs)
295006	Secondary cylinder without servo	697cc (42.50 in³)	51mm (2")	229mm (9")	26 190 N 5892 lbsf	4260 Nm (37 800 in lbs)
295008	Secondary cylinder without servo	853cc (952.00in³)	51mm (2")	280mm (11")	26 190 N 5892 lbsf	5220 Nm (46 280 in lbs)

Secondary cylinder displacement, output force and maximum torque specifications include primary cylinder in calculations

SeaStar Power Steering - Dimensional Data

229mm stroke and 280mm stroke cylinders.

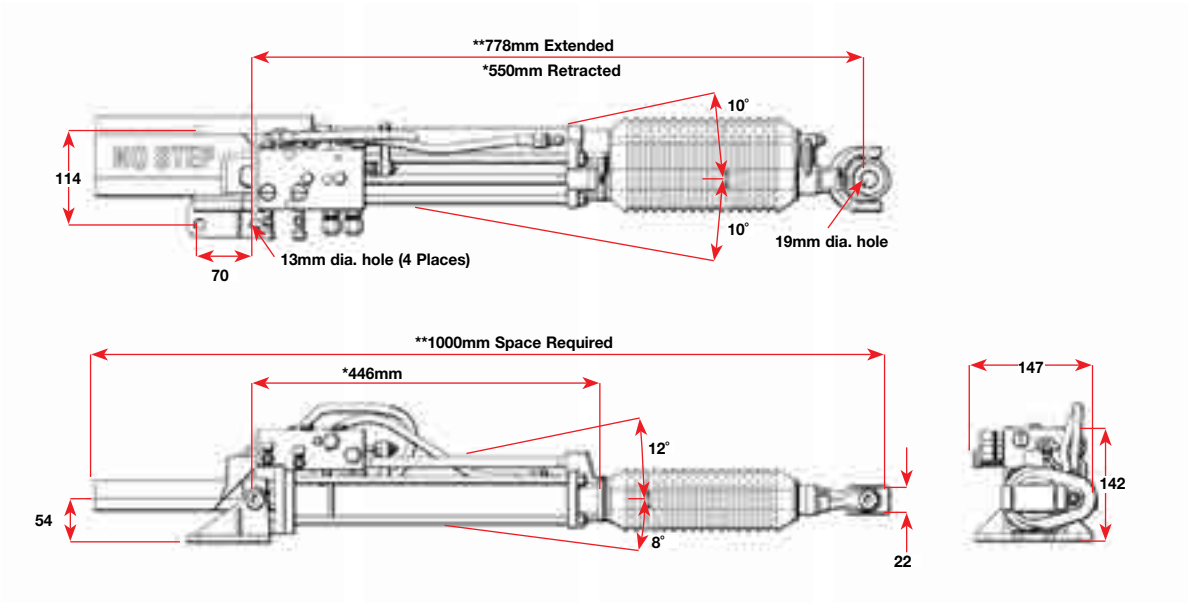

** Add 50mm to this dimension for 295004* *** Add 101mm to this dimension for 295004*

SeaStar Power Pump Selection Guide

When selecting a SeaStar® power pump, always ensure the pump has the required rotation for the engine. These pumps develop the specified rated flow at 1200 RPM, the excess flow at higher RPM is circulated back to the tank via the integral flow control valve. Pressure relief is preset and integral. If using two pumps, outlet check valves are required on each pump. Crossover relief is suggested for twin cylinder applications. Power steering pump specifications - 15 L/min flow control, 1250 psi relief.

Seastar Solutions® Optimus EPS

From the masters in electronic power steering

Optimus Electronic Power Stering (EPS) by SeaStar Solutions represents the next generation in steering, designed to replace traditional hydraulic systems for single, twin, triple and quad outboard configurations as well as now being available for Inboard and Sterndrive applications.

As the captain of your vessel you know how important it is to have command of your boat, Optimus EPS gives you the steering control, performance and comfort you expect without having to arm-wrestle for control.

The optimus electronics provide the very best in performance with car like feel for effortless and comfortable control when steering at speed or under extreme conditions while lightening the steering load with the capability to adjust lock to lock turns with engine RPM. This makes low speed manoeuvering through those tight spots and heavy traffic more precise.

The electronic Optimus helm connects to the Pump Control Module (PCM) via a fault tolerant CANbus. In turn, the PCM commands the individual hydraulic pumps installed below deck which operate the specially engineered electro-hydraulic smart cylinders that control individual movement of the engines.

Additionally, the electronic power steering system is designed to interface easily with Optimus certified third party autopilot systems, eliminating the need for a second pump and lengthy installation procedures. The Optimus system also exceeds the North American ABYC and European ISO standards, recognised symbols of quality assurance.

Advantages of Optimus Electronic Power Steering (EPS)

- No oil at the helm
- Boat that steers like a sports car
- Plug and play autopilot compatibility
- No auto pilot pump or rudder feedback unit
- Adjustable speed sensitive wheel effort
- Adjustable speed sensitive turns lock to lock
- Can be retrofitted to existing mechanical and electronic controlled engines. You do not have to buy new engines
- No tie-bars (twin configuration)
- No liquid tie-bar (CAT)
- On demand pumps which extend battery life
- Components based on existing SeaStar reliability and quality
- NMEA 2000 Certified
- Meets or exceeds NMMA, ABYC, CE, ISO and SAE

Optimus and Optimus 360 Outboard Model Compatibility Guide

Make	Model	Optimus Compatibility	Optimus 360 Compatibility
Mercury			
	Verado	Yes	No
	OptiMax: 1.5L 75-125 HP, 2.5L 135-150 HP, 3.0L 200-250	Yes	Yes
	Pro XS: 112-250 HP	Yes	Yes
	Four Stroke: 3.0L 150 HP	Yes	Yes
Yamaha			
	V4: 150 HP, 175 HP	Yes	Yes
	V6: 3.3L 200 HP, 3.3L 225 HP, 3.3L 250 HP, 4.2L 200 HP	Yes	Yes
	V6: 4.2L 225 HP, 4.2L 250 HP, 4.2L 300 HP, 5.3L 350 HP	Yes	No
Suzuki			
	V4: 140HP, 150 HP, 175 HP	Yes	Yes
	V6 - Yes to the following models: 200 HP, 225 HP, 250 HP, 250SS (250 HP)	Yes	Yes
	V6: 300 HP	Yes	No
Evinrude			
	V6 H.O. (High Output): 150 HP, 200 HP, 225 HP, 250 HP	Yes	Yes
	V6 E -TEC: 150 HP, 200 HP, 225 HP, 250 HP, 300 HP	Yes	Yes
Honda			
	V4: 115 HP, 135 HP. V6: 150 HP, 200 HP, 225 HP, 250 HP	Yes	Yes

N.B. This compatibility guide is for current production engines sold after May 21st 2012. It is important to remember that this chart will continue to change with additions to model ranges. Please consult BLA for detailed engine compatibility, specific notes and options. It is important to note that the Optimus and Optimus 360 steering system is only available through appointed agents and must be installed by an accredited Optimus 360 installer. For further information and complete system requirements please contact BLA on 1300 252 725.

Electronic Power Steering System Applications

Electronic Power Steering for Outboard Applications

While cable steering, and more recently hydraulics, have made steering easier, the prime mover is still the arms and hands of the captain at the wheel. But all of that has changed. SeaStar Solutions is proud to announce a historic change in boat handling, with its revolutionary Optimus Electronic Power Steering (EPS) for single, twin, triple and quad outboard engine boats. With Optimus EPS, you can take command of your boat without having to arm-wrestle for control.

Applications:

- All single, twin, triple and quad outboard engine boats, electronic and mechanical controlled
- Single and dual helm station boats
- Performance powerboats, bay boats, centre console, saltwater fishing vessels, RIBS, catamarans, houseboats and pontoon boats

Electronic Power Steering for Single Outboard Engine Applications

Available for both retro-fit and new engine installations. As the captain of your vessel you know how important it is to have command of your boat. Optimus EPS gives you the steering control, performance and comfort you expect. With Optimus EPS, you can take command of your boat without having to arm-wrestle for control. Refer to page 798 for more details.

Applications:

- Most single outboard engine boats - electronic and mechanical controlled
- Single and dual helm station boats
- Performance powerboats, bay boats, centre console, saltwater fishing vessels, RIBS, houseboats and pontoon boats

Electronic Power Steering for Inboard and Sterndrive Applications Under 40'

Available for both retro-fit and new engine installations. As the captain of your vessel you know how important it is to have command of your boat. Optimus EPS gives you the steering control, performance and comfort you expect. With Optimus EPS, you can take command of your boat without having to arm-wrestle for control. Refer to page 805 for more details.

Applications:

- Most single and twin inboard & sterndrive engine boats - electronic and mechanical controlled
- Single and twin helm station boats
- Competition ski boats, cruisers, sport fishing yachts

Electronic Power Steering for Inboard Engine Applications 40' to 70'

Builds upon the proven Optimus core technology and components, with a new hydraulic power unit and new inboard smart cylinder. Refer to page 806 for more details.

Applications:

- Most single and twin inboard engine boats - electronic and mechanical controlled
- Single, twin and triple helm station yachts
- Performance motor yachts, express convertibles, and sport yachts

Optimus 360 Electronic Steering

A revolutionary joystick steering/shift/throttle control system engineered for powerboats with mechanically-controlled twin outboards and select electronic controlled engines. Optimus 360 uses state-of-the-art electronics to provide easy 360 degree manoeuvring capabilities when docking, negotiating crowded areas or by loading a vessel onto a trailer. Refer to page 802 for more details.

Applications:

- Mechanically controlled twin outboards
- Select electronic controlled twin, triple and quad outboard engines

Key Components of Seastar Solutions® Optimus EPS and Optimus 360

Optimus Electronic Helm

Features:

- **Adjustable helm turns and steering wheel effort** - Adjustable steering sensitivity and resistance for maximum comfort
- **Speed sensitive helm turns, effort and steering response** - Driver comfort, control and performance as speed varies
- **Dual independent sensors and circuits** - Provides redundancy for reliable operation
- **Electronic helm** - No hydraulic oil at helm
- **Optional tilt helms available** - Adjustable position of steering wheel for personal comfort
- **Optional 2nd helm** - Easy installation, requires only a harness connection

292190

Optimus SmartCylinders - Outboard

Features:

- **Dual independent non-contact sensors and proven** - System reliability and operation SeaStar cylinder design
- **Integrated rudder feedback unit (RFU)** - No additional RFU required for autopilot system
- **Adjustable stainless steel ORB fittings** - Simplifies the installation and allows for easy orientation in any direction

292160

Optimus Hydraulic Steering Pump

Features:

- **On demand hydraulic steering pump** - Significantly reduces overall power consumption and no oil cooler required for hydraulic fluid
- **Simplified semi auto-purge mode** - Allows user to purge system with existing components
- **Designed using SAE J-1171 rated motor** - Meets Coast Guard requirement for ignition protection
- **Third party auto-pilot certified** - A separate auto-pilot pump is not required
- **Integrated service/bypass valve** - Limp home mode on remaining functional engine(s)

Optimus CANtrak Display

Features:

- **CANtrak digital display for messaging and user interface** - Provides interface for adjusting helm turns and steering effort. Dealer adjustable toe in/out and engine turning ratio
- **Displays visual information on system status** - Real-time system status rudder direction and RPM
- **The interface to setup/configure and purge the Optimus EPS System** - No additional device or computer required to get the system functional

Optimus Pump Control Module

Features:

- **Fault tolerant CANbus network**: Ensures system reliability and operation
- **Sealed locking harness connections**: Ensures reliable harness connection protection from vibration
- **Accommodates certified third party autopilot systems**: No additional autopilot pump and RFU
- **Automatic battery selector**: Ensures system operates at peak performance

Optimus 360 Joystick

Features:

- **3 axis joystick with guided feel**: Provides intuitive joystick docking
- **Enables user to confidently control the boat**: Fore/aft, sideways, diagonal and rotational movements
- **Boost mode**: Provides increased docking power to overcome winds/currents
- **Take Command Mode**: Single touch button activation transfers control to the joystick

Optimus i6800 Control Actuator

Features:

- **Independent shift and throttle actuators:** Provides mounting location flexibility
- **Start-In-Gear protection**: Reduces risk of engine damage

Optimus i6800 Control Head

Features:

- **Full Engine Synchronisation**: Allows the user to operate with one hand control
- **Independent adjustable lever resistance/detent:** Customisable by user
- **Integrated trim control**: Ergonomically located on the control handle

Seastar Solutions® Optimus Smart Cylinder - Sterndrive

Features:

- Systems reliability and operation
- No additional RFU required for autopilot system
- Unbalanced cylinder simplifies the installation and allows for easy orientation in any direction

292180

Seastar Solutions® Optimus Smart Cylinder - Inboard

Features:

- Systems reliability and operation
- No additional RFU required for autopilot system
- Unbalanced cylinder simplifies the installation and allows for easy orientation in any direction

292176

Seastar Solutions® Optimus Smart Cylinder - Big Boat

Features:

- 2-1/8" bore diameter / 1" rod / 9-1/2" stroke
- Maximum steering torque: 37,443in-lb
- Maximum actuator force: 5520 lbs
- Uses existing, proven, power steering cylinder mounting foot and rod end
- Non-contact RFU with redundant sensing circuitry
- Adjustable stainless steel ORB hose fittings (SeaStar hose) with bleed fittings
- Durability: meets or exceeds requirements in ABYC P27
- Meets or exceeds NMMA, ABYC, CE, ISO and SAE electrical and environmental requirements
- Anodised aluminum cylinder for maximum corrosion protection, no brass exposed
- Includes boot and cover for shaft protection

292182

Seastar Solutions® Optimus EPS - Single Engine

Seastar now brings you EPS for single engine applications

Optimus EPS truly raises the bar when it comes to comfort, control and manoeuvrability, especially for the new breed of high performance powerboats, saltwater fishing vessels, catamarans, RIBS and it's unlike anything you've ever experienced when it comes to steering.

Available for both retrofit and new engine installations

As a captain of your vessel you know how important it is to have command of your boat, Optimus EPS gives you the steering control, performance and comfort you expect. With Optimus EPS, you can take command of your boat without having to arm-wrestle for control.

Active sensitivity

Lock-to-lock turns and wheel effort are programmed to change with engine RPM. At slow speeds, Optimus EPS can be set to reduce the number of turns lock-to-lock, for example 4 and make it easier to steer. When you're negotiating through traffic or in a tight spot, those smaller moves of the wheel give you precise control. When you're running at speed in open water, Optimus EPS can be set to increase lock-to-lock turns, for example, 6 or 7 and increase steering effort giving the driver more stability to comfortably keep on course. And through it all, Optimus EPS does the work, so you can relax and take it easy.

Advantages of Optimus Electronic Power Steering

- No oil at helm
- Boat that steers like a sports car
- Plug and play autopilot compatibility
- No auto pilot pump or rudder feedback unit
- Auto-adjustable speed sensitive wheel effort
- Auto-adjustable speed sensitive turns lock to lock
- Can be retrofitted to existing mechanical and electronic controlled engines
- On demand pumps which extend battery life
- 2nd station is easy – no additional hose runs
- Components based on existing SeaStar reliability and quality
- NMEA 2000 Certified

Applications for Optimus EPS

- Most single outboard engine boats - electronic and mechanical controlled
- Single and dual helm station boats
- Performance powerboats, bay boats, center console, saltwater fishing vessels, RIBS, catamarans, houseboats and pontoon boats

Optimus EPS Installation

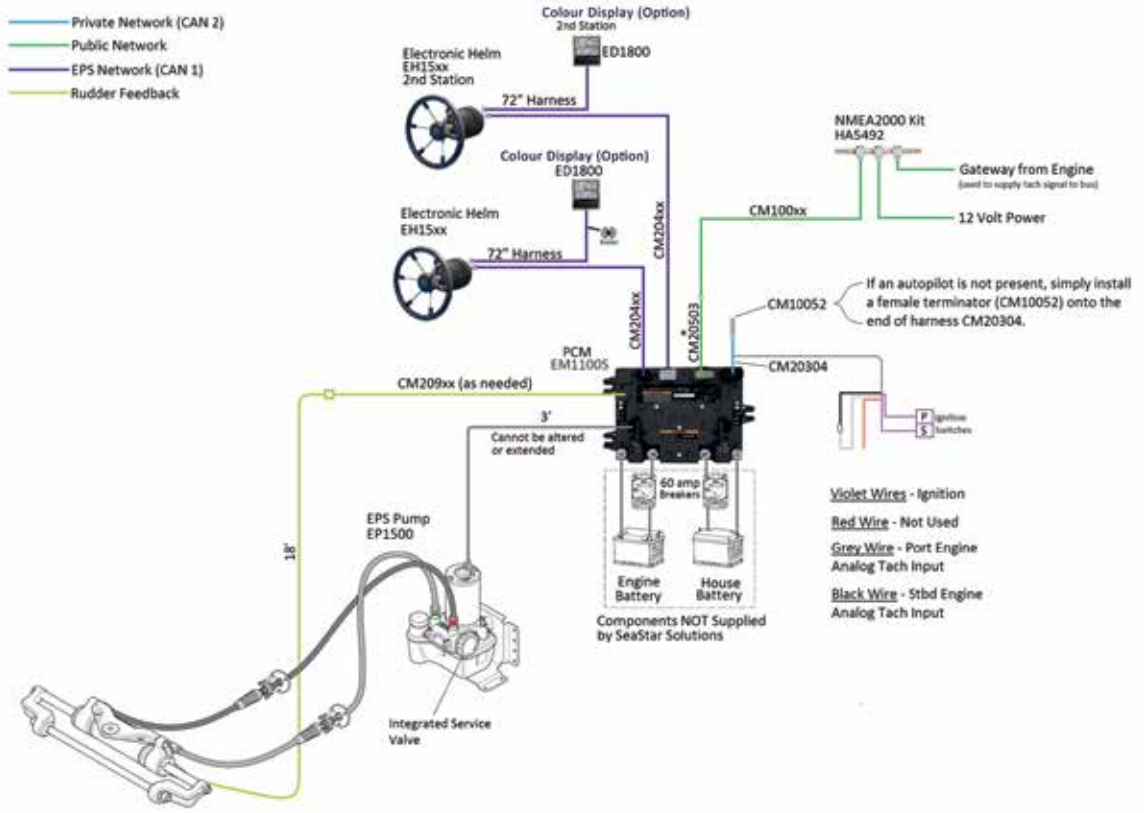

System Components Required For Optimus EPS System

- Single Engine

The following is required (refer system schematic);

- 1 x **292104** Core Pack or 1 x **292101** Core Pack containing a CANtrak Display or Dash Panel, pump control module, steering pump, service valve and the accessories listed below
- CAN terminators and tees **(A)**
- 1 x Smart cylinders **(B)**
- 1 x Electronic helm – 292190 Front mount, **292194** Tilt Sport Plus,
- **292198** Tilt Classic or **292202** Rear mount **(C)**
- 1 x CANbus 1 harness – Helm to PCM **(D)**
- 1 x CANbus 2 harness – CANtrak to PCM **(E)**
- 2 x SeaStar® Bulkhead Pro Hose kits – Steering Pump to Cylinders **(G)**
- Accessory items as needed including harness extensions, EPS fluid etc.

System Schematic

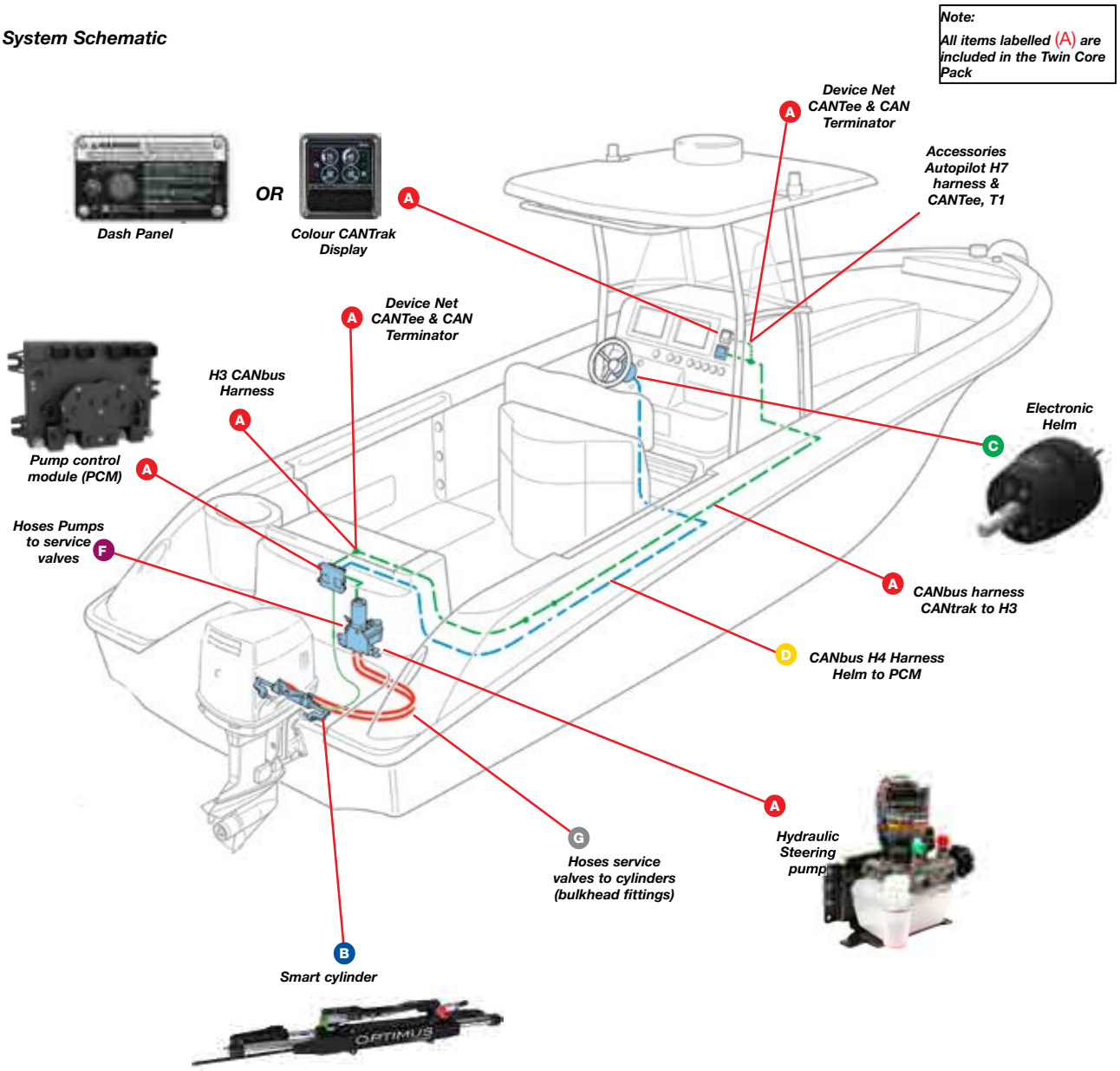

2nd Station Installation

For second station installations additional helm, device Net, CAN 1 harnessess (lengths as required) and CANtrak (optional) are required. Choosing the system components is simple and installation easy when compared to a traditional all hydraulic twin engine installation requiring a tie bar. Suitable for 12 volt systems only. For further Optimus system information and full product listing please refer to page 808-809.

It is important to note that the Optimus steering system must be programmed by an accredited Optimus agent. For further information, complete system requirements and engine compatibilitys please contact BLA on 1300 252 725.

System Components Required For Optimus EPS System

- Twin Engine

The following is required (refer system schematic);

- 1 x **292102** Core Pack containing a CANtrak display, pump control module, steering pump, service valve and the accessories listed below
- CAN terminators and tees **(A)**
- 2 x Smart cylinders sold as a matching pair **(B)**
- 1 x Electronic helm – **292190** Front mount, **292194** Tilt Sport Plus,
- **292198** Tilt Classic or **292202** Rear mount **(C)**
- 1 x CANbus 1 harness – Helm to PCM **(D)**
- 1 x CANbus 2 harness – CANtrak to PCM **(E)**
- 2 x SeaStar® Bulkhead Pro Hose kits – Steering Pump to Cylinders **(G)**
- Accessory items as needed including harness extensions, EPS fluid etc.

System Schematic

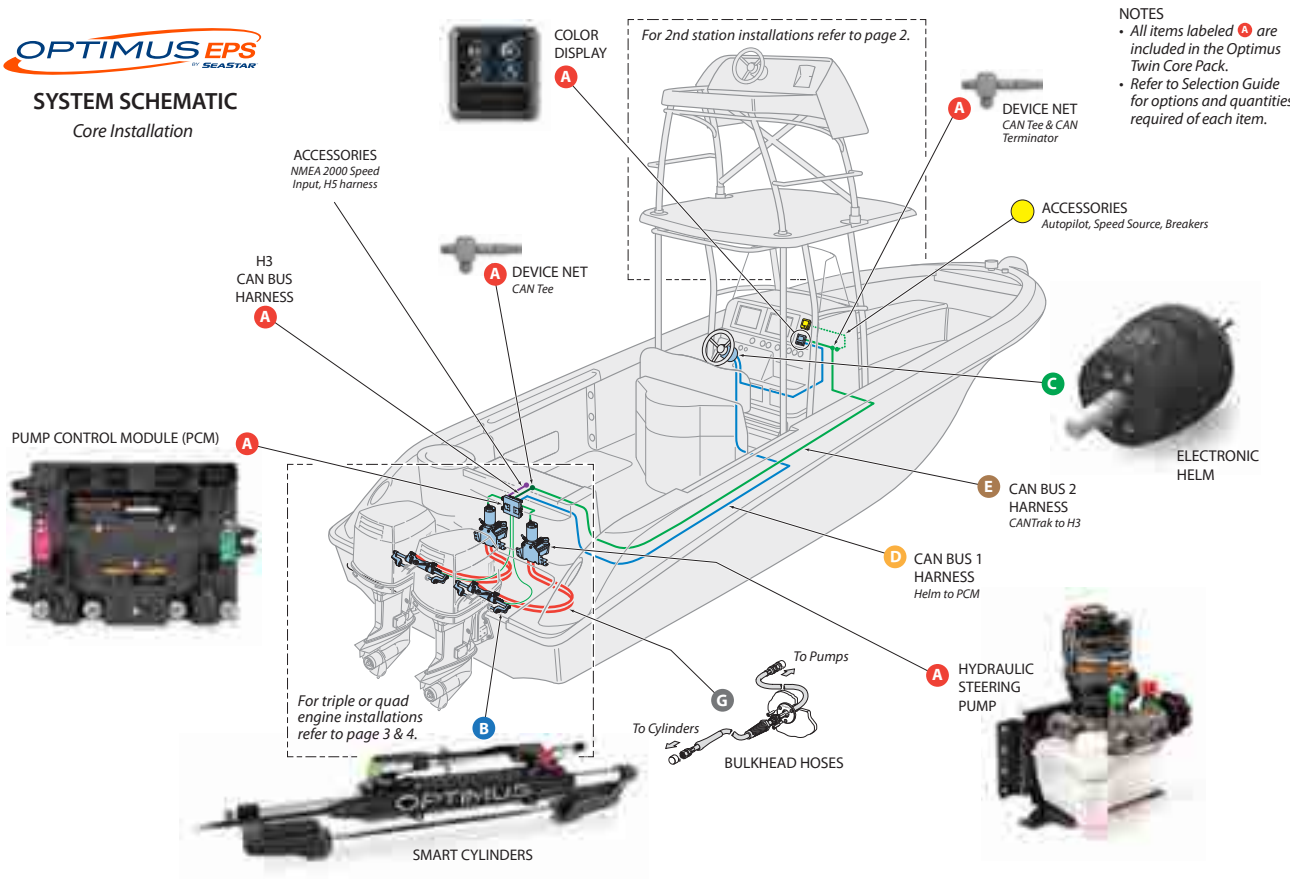

2nd Station Installation

For second station installations additional helm, device Net, CAN 1 harnessess (lengths as required) and CANtrak (optional) are required.

Choosing the system components is simple and installation easy when compared to a traditional all hydraulic twin engine installation requiring a tie bar. Suitable for 12 volt systems only. For further Optimus system information and full product listing please refer to page 808-809.

It is important to note that the Optimus steering system must be programmed by an accredited Optimus agent. For further information, complete system requirements and engine compatible please contact BLA

System Schematic for Twin Engine Application

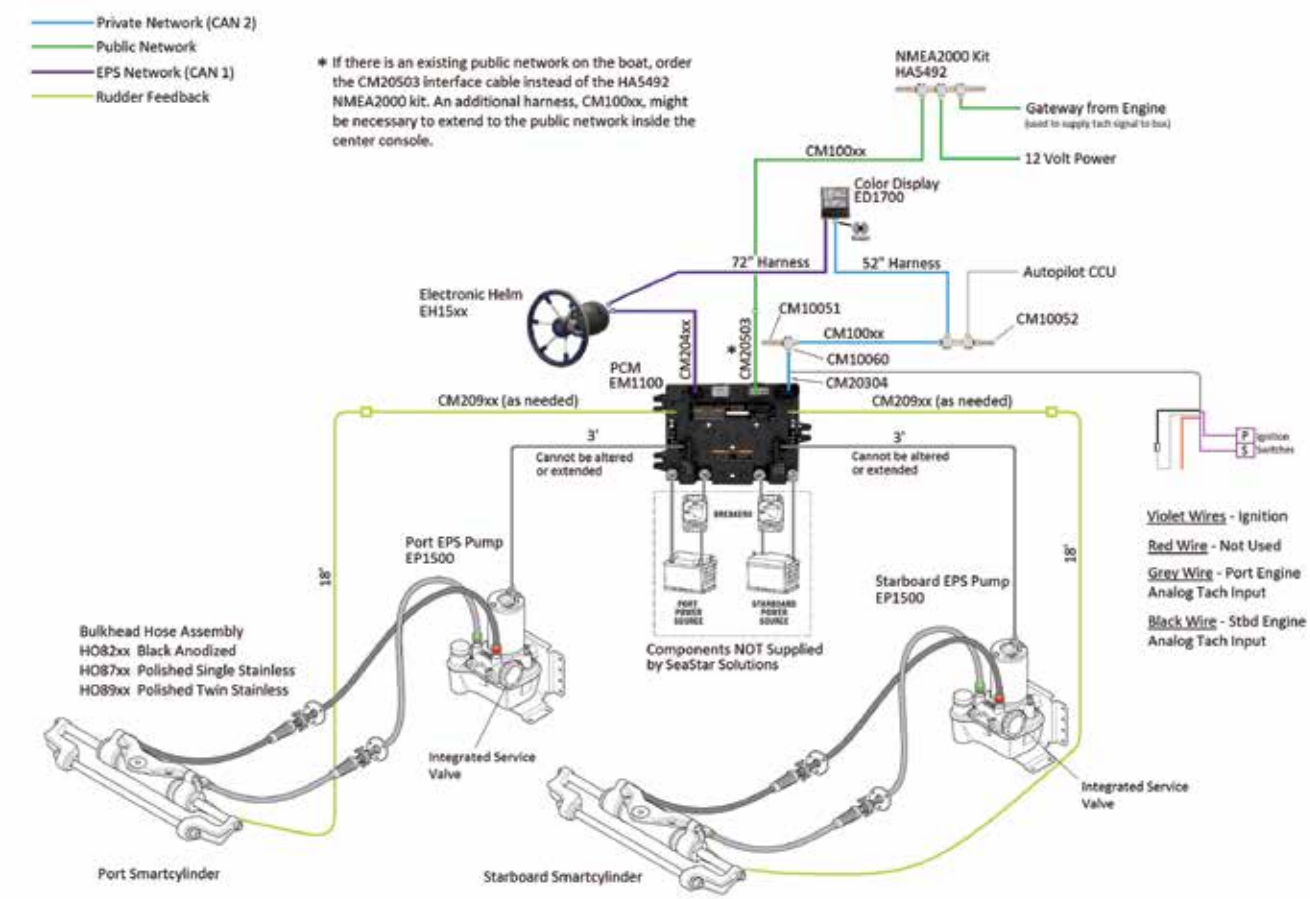

System Schematics for Triple and Quad Engine Twin Cylinder Applications

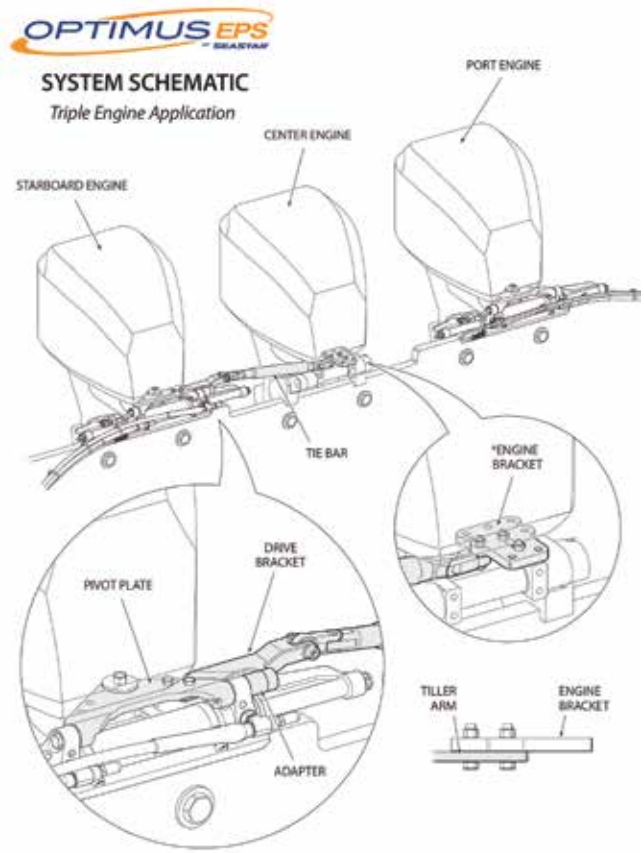

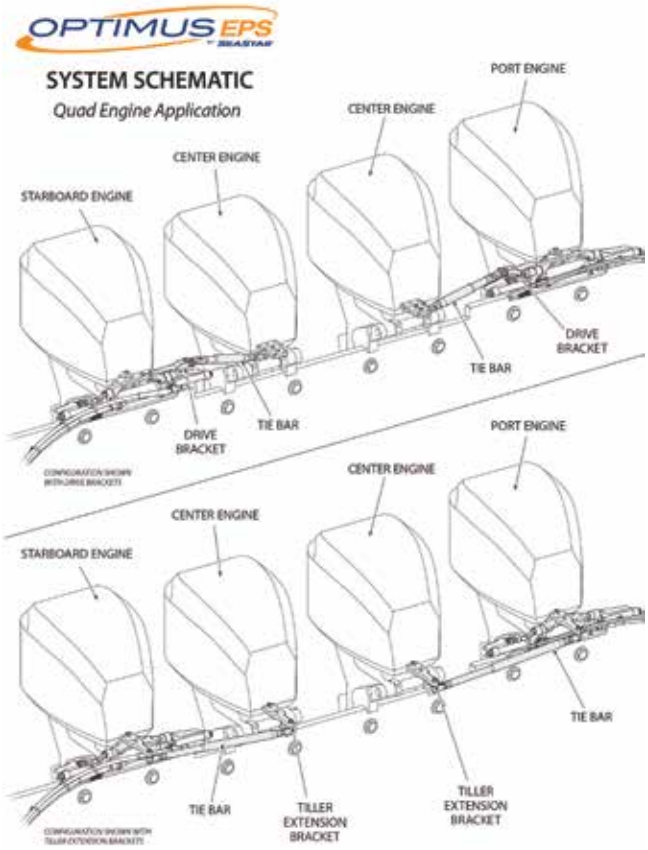

Optimus 360 Joystick Control System

Ultimate Intelligence

The Optimus 360 builds on the Optimus EPS and EST systems to offer a revolutionary command structure engineered for powerboats with mechanically controlled twin outboards to provide complete harmonised control of steering, shift and throttle via an intuitive electronic joystick. As the name suggests, Optimus 360 utilises state of the art electronics to provide 360 degree manoeuvring capabilities which greatly assist in docking, negotiating tight areas such as marinas and for launching and retrieving.

The intuitive hand controlled joystick electronically commands the smart cylinders, actuators, gear shifts and throttles to independently control each engine to send the boat forward, backwards, diagonally, rotate on its own axis or to move sideways. By combining all of these forces independently or in unison the boat is moved in any desired direction to exactly where the operator wants to go.

The Optimus 360 utilises the advanced Optimus Electronic Power Steering system (EPS) which connects via a fault tolerant CANbus to a Pump Control Module (PCM). The PCM operates individual hydraulic pumps that control the electro hydraulic smart cylinders to provide independent movement of each outboard engine.

Optimus 360, for twin, triple and quad engine applications

Optimus 360 gives your boat a whole new dimension of control. By developing the joystick function to be intuitive, Optimus 360 allows you to move your boat not only forward and back, but also sideways, by pushing the joystick to the left, or to the right, and even, rotate on a dime, all with a simple twist of the joystick.

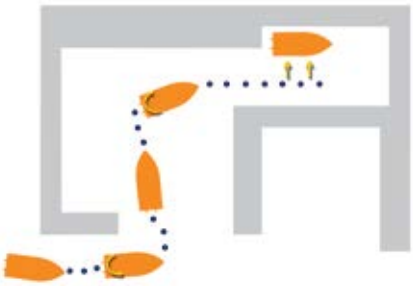

Optimus 360 is designed for low speed maneuvering, and really excels in the marina, when pulling in and out of your slip, or docking. Optimus 360 uses intelligent programming to minimise the amount of shifting required to complete a manoeuvre.

With progressive throttling, the joystick becomes a natural extension of your hand. A light push on the joystick provides minimal thrust while more thrust can be applied by pushing harder on the joystick. The boost mode increases the RPM to give you more thrust when needed.

Each component has been designed to complement the other, resulting in a seamless experience of steering control in virtually every situation on the water. The high level of engineering also extends to the reliability of the system, with quality materials, careful manufacturing and redundant systems, all to stand up to the rigors of life on the water.

Features:

- Three axis joystick with guided feel and boost mode
- Unique joystick design with a focus on user ergonomics and harsh marine environments
- User adjustable speed sensitive helm turns, wheel effort and steering response
- Fault tolerant CAN Bus network
- Sealed, locking cable connections
- On demand hydraulic steering pumps
- Adjustable stainless steel ORB fittings on the SmartCylinder
- Compatible with 3rd party autopilot systems
- Dual redundancy components
- Optional multi-joystick capability

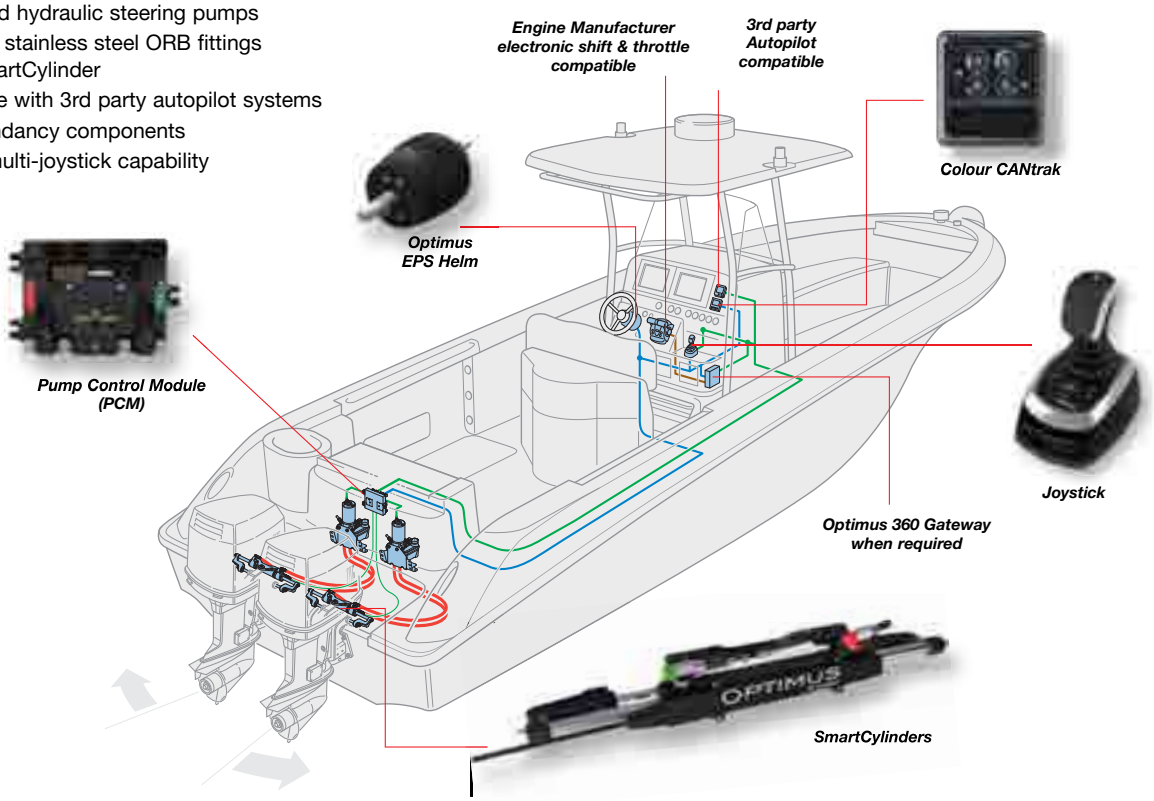

SeaStation GPS

Easy ADD-ON to your Optimus 360 boat

Add new functionality to your Optimus 360 equipped twin, triple or quad engine vessel with the SeaStation. When you are trying to locate that ideal spot over a reef or a wreck, SeaStation is ideal. Just hold your position and heading, drop your lines and see if you have success, if not, simply move to another location and engage SeaStation. No physical anchor required. SeaStar Solutions has applied the same smart algorithms to SeaStation as you have experienced with Optimus 360 joystick control to reduce unnecessary shifting and jocking of the engines while providing superior position and heading functions for a large selection of engine platforms.

Captains have told us that we can't have the jarring from the engines shifting and unnecessary movement as it does not sound good and also could impact the fishing outcome. We took this input seriously and we are confident SeaStation will be a fishing enabler. Another common use for SeaStation will be when you are waiting for a spot to open at the dock or waiting for a bridge to lift. Simply push the A button or A&C buttons on the joystick, acknowledge via the Color CANtrak display and the boat will hold its position. When ready to take command, simply toggle the A and/or C button off for control with the joystick. As SeaStar adds more functions and features to SeaStation they will be available with s/w updates.

WARNING: This is not to be used for any kind of swimming and diving.

Mode 1: Heading Hold

Hold heading regardless of position. Applications include Kite fishing/Drift fishing. Easier setup - Maximize fishing time.

Mode 2: Position Hold

Hold position regardless of heading. Applications include bait fishing and wreck/ reef fishing. Finding the natural heading when in position hold could be the best option.

Mode 3: Heading and Position Hold

Stay in position and hold heading. Applications include waiting for a bridge to open, a spot at the dock to become available and bait fishing near a structure.

SEASTATION BY SEASTAR

A - Position
C - Heading

SeaStation Modes

This is a safety step to make sure that all precautions have been taken to make sure there is nothing in the water when SeaStation is engaged. After pressing the A and C buttons on the joystick, the captain will be prompted to engage SeaStation by pushing the button on the CANtrak display.

Heading Adjustment

Jog buttons have been created to adjust heading in five degree increments. This feature allows heading adjustment without disengaging SeaStation to align the vessel stern to wind and current to reduce engine activity.

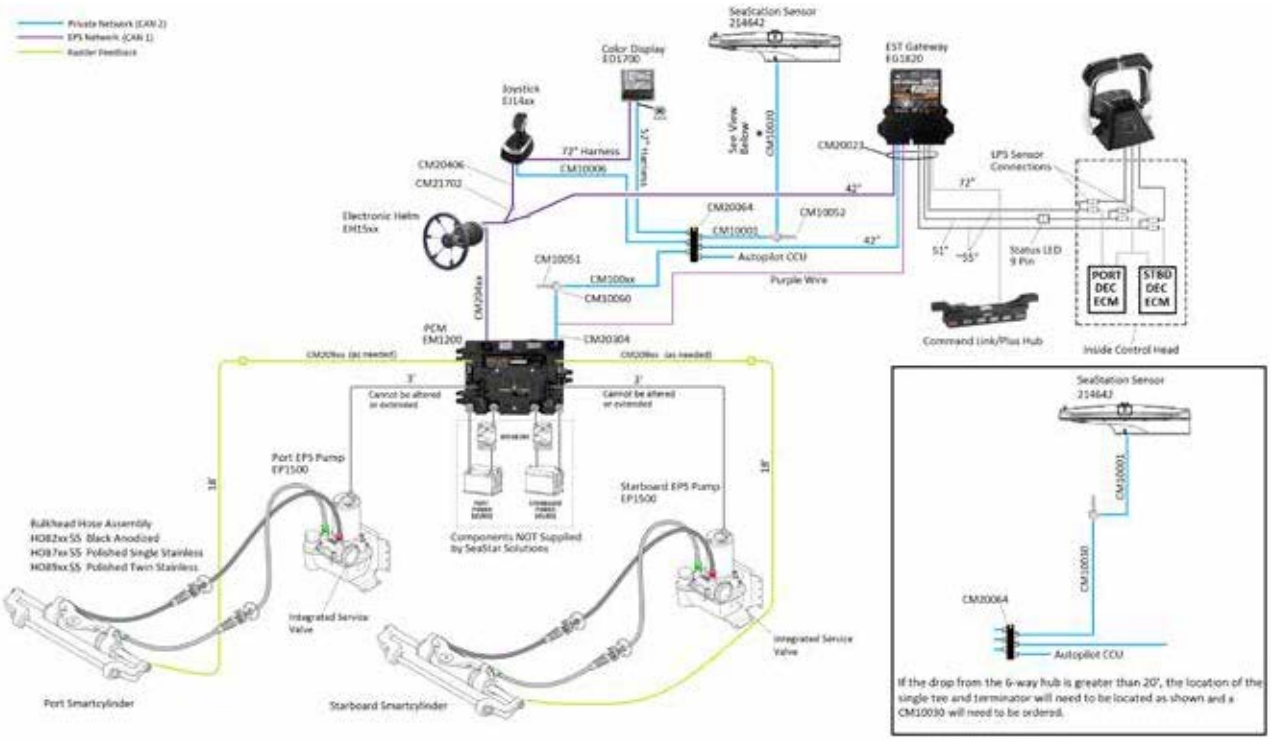

System Requirements

BLA Code	292108
Description	Optimus 360 Joystick Control System SeaStation Kit EPSK1600
General Specifications	
Inclusions	Dual antenna GPS sensor DeviceNet CAN2 harness and T-connector Software and sensor license activation code Warning decals are provided to be placed near all boarding access points
Accuracy (target)	± 3 Meters Position hold ± 10° Heading hold
Techincal Specifications	
Sensor and Mounting Information	
Dimensions	Not including mount: 25.9 L x 12.9 W x 4.5 H (cm) 10.2 L x 5.1 W x 1.8 H (in) Including mount: 25.9 L x 12.9 W x 12.8 H (cm) 10.2 L x 5.1 W x 5.0 H (in)
Weight	Not including mount: 0.42 kg (0.9 lb) Including mount: 0.51 kg (1.1 lb)

System Components Required For Optimus EPS System - Sterndrive/Inboard

The following is required (refer system schematic);

- 1 x **2921XX** Core Pack containing a CANtrak display, pump control module, steering pump, service valve and the accessories listed below
- CAN terminators and tees **(A)**
- 1 x Smart cylinders (as displayed below) **(B)**
- 1 x Electronic helm – **292190** Front mount, **292194** Tilt Sport Plus,
- **292198** Tilt Classic or **292202** Rear mount **(C)**
- 1 x CANbus 1 harness – Helm to PCM **(D)**
- 1 x CANbus 2 harness – CANtrak to PCM **(E)**
- 2 x SeaStar® Pro Hose kits – Steering Pump to Cylinders **(G)**
- Accessory items as needed including harness extensions, EPS fluid etc.

292182

Core packs to suit the above

BLA Code	Description	Part Number
292144	Optimus EPS Single Core PK Unbalanced	EPSK1120
292146	Optimus EPS Twin Core PK Unbalanced	EPSK1280
292148	Optimus EPS Inboard Large Core PK	EPSK1300

292180

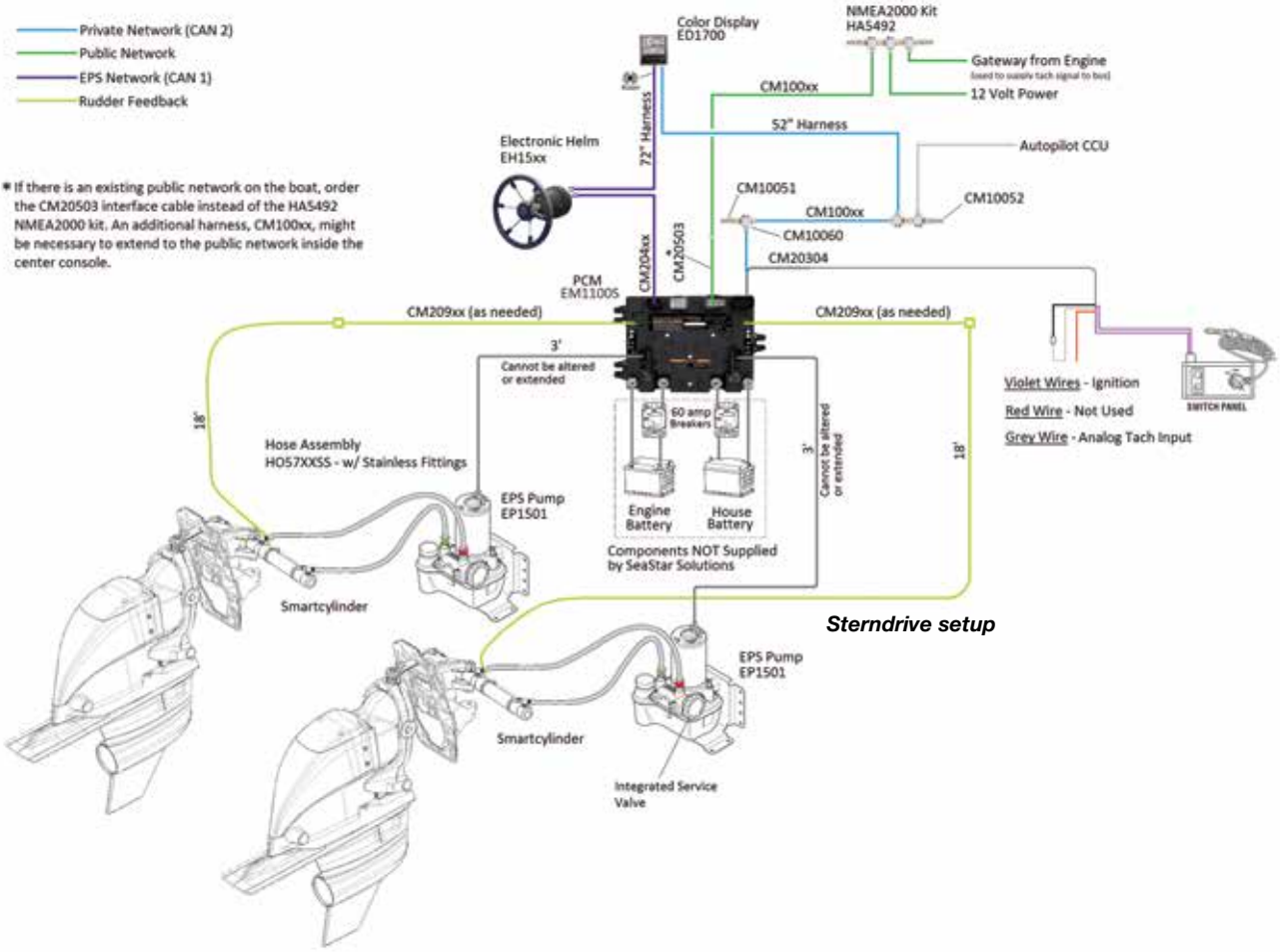

System Components Required For Optimus EPS System

- Big Boats 40'-70'

The following is required (refer system schematic);

- 1 x **292150** Core Pack containing a CANtrak display, pump control module, steering pump, service valve and the accessories listed below
- CAN terminators and tees **(A)**
- 1 x Smart cylinders **292182** or 2 if dual system **(B)**
- 1 x Electronic helm – **292190** Front mount, **292194** Tilt Sport Plus,
- **292198** Tilt Classic or **292202** Rear mount **(C)**
- 1 x CANbus 1 harness – Helm to PCM **(D)**
- 1 x CANbus 2 harness – CANtrak to PCM **(E)**
- 2 x SeaStar® Pro Hose kits – Steering Pump to Cylinders **(G)**
- Accessory items as needed including harness extensions, EPS fluid etc.

292176

Optimus EPS Installation

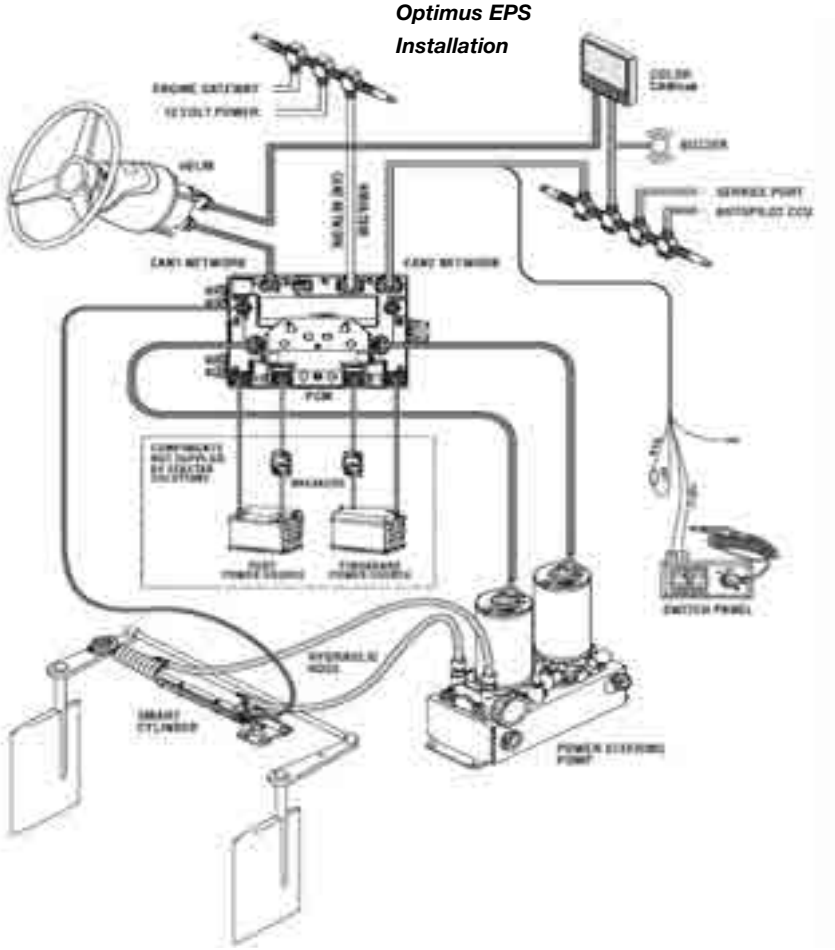

Optimus EPS Pump Features:

- Uses existing Optimus EPS pumps, running in parallel for increased flow
- Similar dual pump configuration as Optimus EPS (outboards) provides redundancy in the event of pump failure
- ~2 GPM output at no load
- 2000 PSI pressure relief
- Integrated service valve to allow manual repositioning of rudder if necessary
- Powder coated aluminum reservoir
- Sight glass for easy fluid level check
- Durability: meets or exceeds requirements in ABYC P27
- Water ingress protection: IPX7
- Meets or exceeds NMMA, ABYC, CE, ISO and SAE electrical and environmental requirements
- Pumps are on demand to minimise power consumption

System Components Required For Optimus EPS System

- Big Boats 60'-100'

The following is required (refer system schematic);

- 1 x **292150** Core Pack containing a CANtrak display, pump control module, steering pump, service valve and the accessories listed below
- 2 x Smart cylinders **292176** **(B)**
- 1 x Electronic helm – Front mount, Tilt Sport Plus, Tilt Classic or Rear mount **(C)**
- 1 x CANbus 1 harness – Helm to PCM **(D)**
- 1 x CANbus 2 harness – CANtrak to PCM **(E)**
- 2 x SeaStar® Pro Hose kits – Steering Pump to to Cylinders **(G)**
- Accessory items as needed including harness extensions, EPS fluid etc.

For 2nd and 3rd station installations, contact BLA on **1300 252 725** for details. Survey forms are required for B.O.M, contact BLA for details.

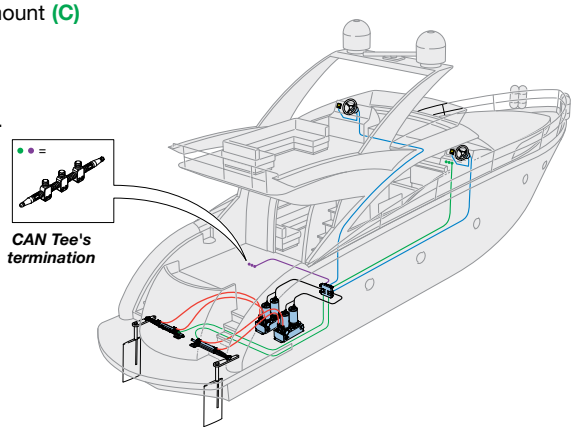

Features:

- Up to three helms stations
- Automatic battery management with sensing, warnings & best battery selection
- On demand hydraulic steering pump minimising power consumption
- No oil at the helm
- Rugged electronics for 24 VDC applications
- Colour dash display showing rudder command and rudder position graphic
- Displays system health
- Display provides system setup interface
- Communicates faults and any special handling instructions to the operator
- No requirement for tie-bars depending on rudder loads
- Simple software updating via USB port
- Programmable number of turns lock to lock with speed
- Auto-adjusting steering end stops and resistance with speed
- Dual redundant position sensing on all moving components
- Helm offers both 3/4" taper or 1" straight shaft options
- Utilises fault tolerant CAN network
- Full autopilot CANbus connectivity and integration. No additional pumps or sensors required
- Adjustable max rudder hard over angle with speed range 25° to 40° Centre to hard over
- Rudder toe in or out up to 5° with speed
- Position proportional rudder gain for faster steering response near neutral rudder position
- RPM input: NMEA 2000, J1939 or analog pulse compatible
- Pump features an integrated service/bypass valve allows a limp home mode
- Meets or exceeds ABYC, ISO and SAE electrical and environmental requirements

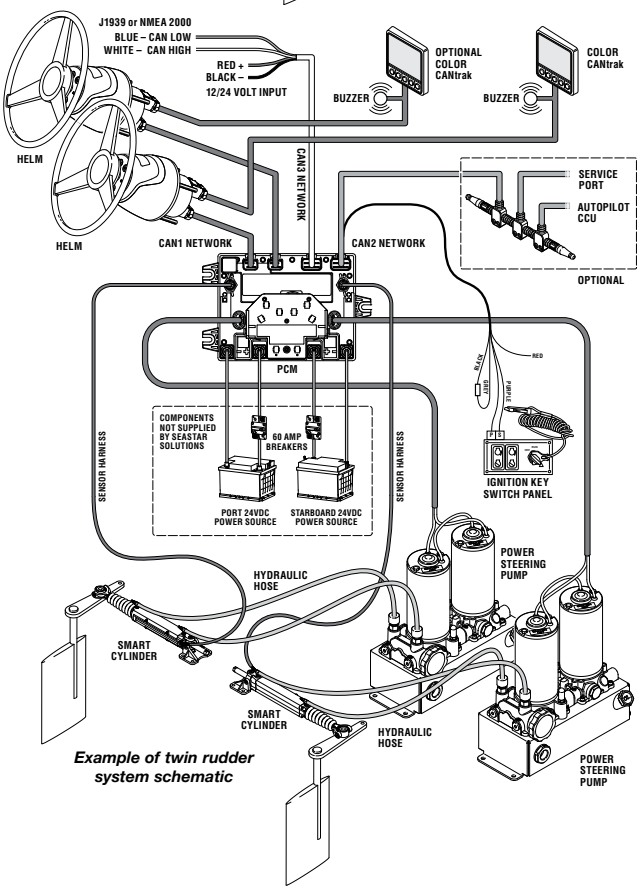

Example of twin rudder system schematic

Mounting Configurations & System Schematic

While using the table below be sure that your steering cylinder is at mid-stroke as shown in the figure to ensure the cylinder operates correctly.

Description	292176		
Steering Angles			
50°		60°	
A	B	A	B
11.27"	7.96"	9.50"	5.98"
56,300 in-lbs*		45,400 in-lbs*	
Steering Angles			
70°		80°	
A	B	A	B
8.25"	4.50"	7.40"	3.41"
37,400 in-lbs*		31,200 in-lbs*	

**** Torque shown is per cylinder***
Example: two cylinders at 60° steering angle will give a combined total of 90,000 in-lbs* of torque.

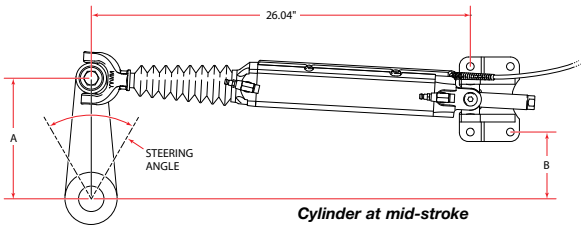

Cylinder at mid-stroke

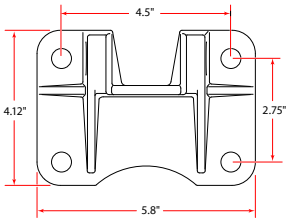

Mounting foot

Optimus EPS and 360 Selection Guide Chart

A	Choose corepack that suits the engine application
B	Select cylinders and tiebars to suit application
C	Select helm
D	Select h4 harness to suit length required
E	Select h7 harness to suit length required
F	Select 4 control cables when fitting mst optimus 360 system
G	Select 4 x bulkhead pro hoses to suit application
I	Select optional componenets as required
NOTES	All EPS system need engine gateway for tach signal using **292410** NMEA 2000 source

A	BLA Code	Core Packs Available	Part #	Qty	EPS Only All Engines	Optimus 360 Est Upgrade From EPS	Optimus 360 Outboard Select Engine Type & Qty's	EPS Stern Drive	EPS Inboard
		EPS Only							
	292101	Optimus EPS Single Core Pack (Dash Panel)	EPSK1100P	1	X				
	292102	Optimus EPS Twin Core Pack	EPSK1200C	1	X				
	292104	Optimus EPS Single (Cantrak Display)	EPSK1100C	1	X				
		Engine gateway required as per fitting instructions			X			X	X
		Joystick Upgrade Kits							
	292110	Optimus 360 Joystick Upgrade Twin	EPSK1435	1		X			
	292112	Optimus 360 Joystick Yamaha Triple,Est Upgrade Kit	EPSK1455	1		X			
	292114	Optimus 360 Joystick Yamaha Quad,Est Upgrade Kit	EPSK1460	1		X			
	292142	Optimus 360 Joystick Suzuki Twin,Est Upgrade Kit	EPSK1420	1		X			
		Mechanical Core Pack							
DIFFERENT CORE PACKS AVAILABLE	**292120**	Optimus 360 Joystick Twin Corepack (Mechanical Shift)	EPSK1210	1					
		Yamaha		1					
	292126	Optimus 360 Joystick Yamaha Twin Est	EPSK1235	1			X		
	292130	Optimus 360 Joystick Yamaha Triple Est	EPSK1255	1			X		
	292134	Optimus 360 Joystick Yamaha, Quad, Est	EPSK1260	1			X		
	292132	Optimus 360 Joystick Twin Brp Est Est	EPSK1225	1			X		
		Suzuki							
	292138	Optimus 360 Joystick Suzuki Twin,Est	EPSK1220	1			X		
	292140	Optimus 360 Joystick Suzuki Triple,Est	EPSK1222	1			X		
		Stern Drive / Inboard							
	292144	Optimus EPS Single Core Pk Unbalanced	EPSK1120	1				X	
	292146	Optimus EPS Twin Core Pk Unbalanced	EPSK1280	1				X	
	292148	Optimus EPS Inboard Large Core Pk	EPSK1300	1					X
		Big Boat EPS							
	292150	Optimus Big Boat EPS Large Inboard Dual Cylinder	EPSK1500	1					

B	BLA Code	Description	Part #	Qty	2 Required
	292160	Fm, C/W Stbd Cable Exit	EC5310	1	
	292162	Fm, STBD Engine With Port Side Brkt To Connect Tiebar	EC5315	1	
	292164	Fm, Port Side Engine With Starboard Side Brkt To Connect Tiebar	EC5317	1	
	292168	Fm, C/W Stbd Cable Exit,Inverted Plate	EC5340	1	
	292170	Tournament, C/W Stbd Cable Exit	EC6810	1	
SMART CYLINDER CHOOSE TWO CYLINDERS	**292172**	Tournament, STBD Engine With Port Side Brkt To Connect Tiebar	EC6815	1	
	292174	Tournament, Port Side Engine With STBD Side Brkt To Connect Tiebar	EC6817	1	
	292176	Inboard	EC5810	1	
	292180	EPS,Unbalanced	EC5360		
	292182	Inboard	EC5380		
	292184	Kit, Tiller Extension, EPS (Includes 2)	HA6850	1	
	292186	Hardware Kit,Tiebar, EPS, Triple/Quad Eng Bracket	HA6815	1	
	291214	Tiebar, Tournament, Adj, Large	HO6822	1	
	291216	Tiebar, Tournament, Adj, Extra Large	HO6823	1	
		Please note: cylinders must be ordered to fit application. Smartcyinder comes with 18ft harness			

C	BLA Code	Description	Part #	Qty	1 Required
SMART CYLINDER CHOOSE TWO CYLINDER	**292190**	Electronic Helm, Front Mount	EH1510	1	
	292194	Electronic Tilt Helm, Sport Plus	EH1530	1	
	292198	Electronic Tilt Helm, Classic	EH1550	1	
	292202	Electronic Helm, Rear Mount	EH1570	1	
	292204	Electronic Helm, Classic	EH1552	1	

D	BLA Code	Description Length	Part #	Qty	1 Required
CANBUS 1 HARNESS HELM TO PCM CHOOSE ONE	**55-CM20403**	Harness, EPS, H4, 3 Ft, 6 Pin Fci	CM20403	1	
	292260	Harness, EPS, H4, 6 Ft, 6 Pin Fci	CM20406	1	
	292262	Harness, EPS, H4, 12 Ft, 6 Pin Fci	CM20412	1	
	292264	Harness, EPS, H4, 18 Ft, 6 Pin Fci	CM20418	1	
	292266	Harness, EPS, H4, 24 Ft, 6 Pin Fci	CM20424	1	
	292268	Harness, EPS, H4, 30 Ft, 6 Pin Fci	CM20430	1	
	292270	Harness, EPS, H4, 36 Ft, 6 Pin Fci	CM20436	1	

SEASTAR SOLUTIONS | OPTIMUS EPS BY SEASTAR | OPTIMUS 360 BY SEASTAR

E	BLA Code	Description Length	Part #	Qty	1 Required
CANBUS 2 HARNESS CANTRAK TO H3 OPTIONAL	55-CM10003	Harness, EPS, H7, 3 Ft, Micro-C Ext.	CM10003	1	
	292280	Harness, EPS, H7, 6 Ft, Micro-C Ext.	CM10006	1	
	292282	Harness, EPS, H7, 9 Ft, Micro-C Ext.	CM10009	1	
	292284	Harness, EPS, H7, 12 Ft, Micro-C Ext.	CM10012	1	
	292286	Harness, EPS, H7, 16 Ft, Micro-C Ext.	CM10016	1	
	292288	Harness, EPS, H7, 20 Ft, Micro-C Ext.	CM10020	1	
	292290	Harness, EPS, H7, 30 Ft, Micro-C Ext.	CM10030	1	

F	BLA Code	Description	Part #	Qty
CONTROL CABLES	3033XX	Mechanical shift system 292120 need to choose 4 x CCX633 extreme control cables	CCX633XX	4

G	BLA Code	Description	Part #	Qty
HOSES PUMPS TO CYLINDERS CHOOSE FOUR HOSES	293408	Seastar pro bulkhead hose kit, 8ft	293408	1
	293412	Seastar pro bulkhead hose kit, 12ft	293412	1
	293414	Seastar pro bulkhead hose kit, 14ft	293414	1
	293416	Seastar pro bulkhead hose kit, 16ft	293416	1
	293418	Seastar pro bulkhead hose kit, 18ft	293418	1
	293420	Seastar pro bulkhead hose kit, 20ft	293420	1
	293422	Seastar pro bulkhead hose kit, 22ft	293422	1
	293424	Seastar pro bulkhead hose kit, 24ft	293424	1
	293426	Seastar pro bulkhead hose kit, 26ft	293426	1
	293428	Seastar pro bulkhead hose kit, 28ft	293428	1
	293430	Seastar pro bulkhead hose kit, 30ft	293430	1

I	BLA Code	Description	Part #	Qty	Required		
ACCESSORY ITEMS AS NEEDED	292300	Smartcylinder Harness Ext. EPS, H9, 6Ft	CM20906	1			
	292302	Smartcylinder Harness Ext. EPS, H9, 12Ft	CM20912	1			
	292304	Smartcylinder Harness Ext. EPS, H9, 18Ft	CM20918	1			
	292212	Harness, H24, Ftcan Union, M-M, 10"	CM22401	1			
	292210	Harness, EPS, H5, 10 Pin Fci To Devicenet	CM20503	1			
	292228	Harness t/s Raymarine	CM21206	1			
	292336	Harness, EPS, H18, Ftcan EX M-F, 36FT	CM22036	1			
	292390	Seastar EPS Fluid ,1 Us Quart	HA5482	1			
	292400	Kit,Tilt/Trim Switch, EPS	HA5491	1			
	292410	Kit Nmea 2000 Network	HA5492	1	X	X	X
	298467	Fitting, 90 Degree, 2 In A Bag	HF6004	1			
	292230	Wedge Kit, Pump	HA5485	1			
	885010	Purge Hose Kit, EPS, 15Ft	HA5486	1	Hoses needed to purge new system		
	885012	Purge Hose Kit, EPS, 30Ft	HA5487	1	Hoses needed to purge new system		
	55-HA5501	Kit, Smartstick, Replacement EPS	HA5501	1			
	55-EPSK1206	Kit, Dealer System Setup Tool	EPSK1206	1			
	55-CM21702	Harness EPS H17 Ftcan Wye	CM21702	1			
	305492	Device Net Can Tee, T1					

	BLA Code	Description	Part #	Qty	Required
2ND HELM ONLY		**Buzzer Option:**			
	55-EH15XX	Select Helm From Section C	EH15XX	1	
	292412	Buzzer Kit	HA5493	1	
	55-CM204XX	Select H4 Harness From Section D	CM204XX	1	
		Cantrak Option:			
	55-ED1700	Cantrak Display	ED1700	1	
	55-CM100XX	Select H7 Harness From Section E	CM100XX		
	305492	Device Net Can Tee, T1	CM10060	2	
	55-EH15XX	Select Helm From Section C	EH15XX	1	
	55-CM204XX	Select H4 Harness From Section D	CM204XX	1	

	BLA Code	Description	Part #	Qty	Required
2ND STATION (JOYSTICK)		**Buzzer Option:**			
	55-EJ1401	Joystick	EJ1401	1	
	55-EG1820	Gateway, Est, Yamaha	EG1820	1	
	55-CM20025	Harness, Gateway, Est, Yamaha	CM20025	1	
	292260	Harness, EPS, H4, 6 Ft, 6 Pin Fci	CM20406	1	
	55-CM100XX	Select Harness, EPS, H7, Xx Ft, Micro-C Ext.	CM100XX	1	
	292412	Buzzer Kit	HA5493	1	
	305490	Micro-C Ext, M/F 03' (Needed To Go From The Js To The Can 2 Hub)	CM10003	1	
	305492	Device Net Can Tee, T1	CM10060	3	
		Cantrak Option:			
	292214	Cantrak	ED1700	1	
	55-EJ1401	Joystick	EJ1401	1	
	55-EG1820	Gateway, Est, Yamaha	EG1820	1	
	55-CM20025	Harness, Gateway, Est, Yamaha	CM20025	1	
	55-CM20406	Harness, EPS, H4, 6 Ft, 6 Pin Fci	CM20406	1	
	55-CM100XX	Select Harness, EPS, H7, Xx Ft, Micro-C Ext.	CM100XX	1	
	55-CM10003	Micro-C Ext, M/F 03' (Needed To Go From The Js To The Can 2 Hub)	CM10003	1	
	305492	Device Net Can Tee, T1	CM10060	1	
	55-CM21702	Harness EPS H17 Ftcan Wye	CM21702	1	

SeaStar® Power Assist

The SeaStar® Power Assist unit can be installed on new SeaStar® steering installations or as an easy retro-fit to existing systems. Suitable for most boat types, the SeaStar® Power Assist uses an electronically controlled hydraulic pump to provide on-demand power steering. Designed to be easily installed into the hydraulic steering circuit between the helm and steering cylinder.

An additional feature allows the Power Assist to adjust automatically to the input voltage from the boats batteries to either 12V or 24V.

The SeaStar® Power Assist can be used on boats with multiple engines and rudders, multiple steering stations and autopilots. As a built in safety feature the steering system will automatically return to manual operation without any change to the number of lock-to-lock turns if power to the unit is interrupted for any reason.

The SeaStar® Power Assist helps eliminate steering loads and provides high levels of comfort and control making boating more pleasurable. The SeaStar® Power Assist allows the boat to be driven safely and easily even in the most extreme conditions. Also consider the Power assist Pro which delivers up to 1500 psi to suit SeaStar® Pro helms.

Typical Power Assist Application In and Outboard Boat

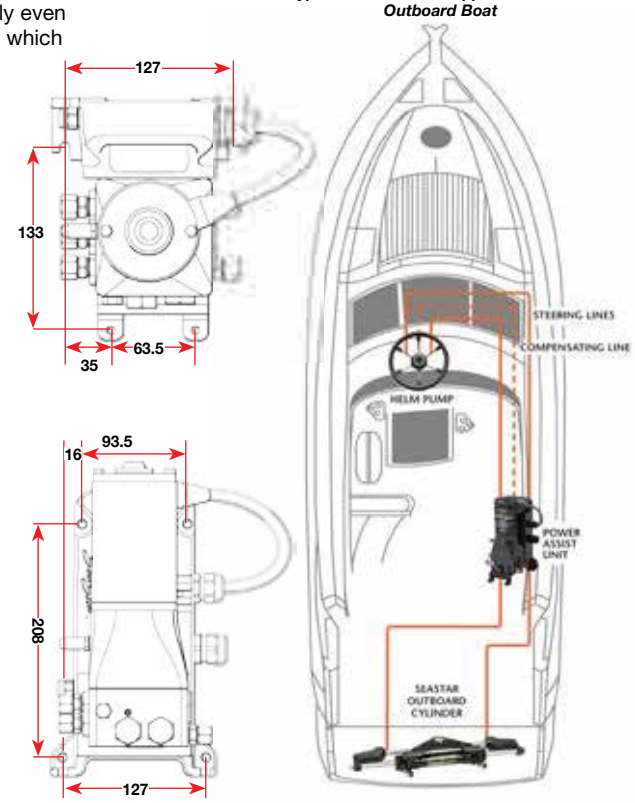

Features:

- Dramatically reduces steering effort
- Easy to install with universal mount to suit either vertical or horizontal fixing
- Simple addition to an existing SeaStar® steering system (from 1.4 to 2.4 SeaStar® standard and tilt helms)
- For SeaStar® Pro Helms refer to **295067**
- OEM or retro-fit
- Returns to manual operation in the event of power failure
- Suitable for use with autopilots and multiple station installations
- 12V or 24V operation with 4.5m wiring harness included
- Ignition protected (SAE J-1171)
- For use only with SeaStar® or SeaStar® Pro hose
- ABYC, CE, NMMA, ISO 10592 approved
- Compatible with power purge systems

BLA Code	Description
295067	Power Assist Pro System
295068	Power Assist System (24V Only)
295069	Power Assist System

SeaStar® Power Assist Autopilot

The SeaStar® Power Assist is also available with the addition of an integral pilot pump for autopilot use. The new Power Assist with autopilot provides is a fixed flow reversible pump, with low or no vibration and low power consumption.

Suitable for most boat types and a wide variety of installation applications the compact unit can be installed on new SeaStar® installations or as an easy retro-fit.

Features:

- Autopilot pump combined with SeaStar® power assist
- Simple add on to existing SeaStar® manual systems
- Little or no vibration or noise
- Dramatic reduction in steering wheel torque
- Suitable for 1.4-2.4 SeaStar® helm pumps
- Low power consumption
- CE approved, Ignition protected compliant (SAE J-1171)
- ABYC, CE, NMMA, ISO 10592 Approved

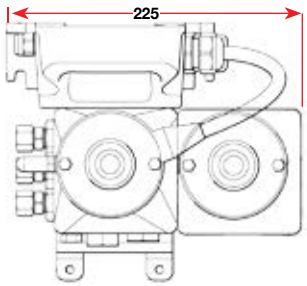

BLA Code	Flow Rate Per Minute		Cylinder Capacity		Voltage
	in	cc	in	cc	
295072	60	983	4.9-14	80.41-237	12
295076	100	1638	14-21	237-354	12
295078	100	1638	14-21	237-354	24

SeaStar® Autopilot Pump

The SeaStar Autopilot pump is a high efficiency, fixed flow, reversible type pump set producing very little vibration or noise. It is offered in 12 and 24 volt configurations, as well as two different pump sizes (type 1 & type 2). It can be used as a stand alone pilot pump or can be mounted to a previously installed SeaStar Power Assist unit and can prevent the need to break into the hydraulic lines.

Features:

- Long life DC Motor (i.e. long life brushes)
- Compact design
- Simplified installation
- Low power consumption
- ABYC, CE and J1171 compliant
- Superior corrosion resistance
- Quiet operation
- Mounting bracket included
- Stand alone or mounts to SeaStar Power Assist unit
- Replaces other 12 & 24 volt pumps

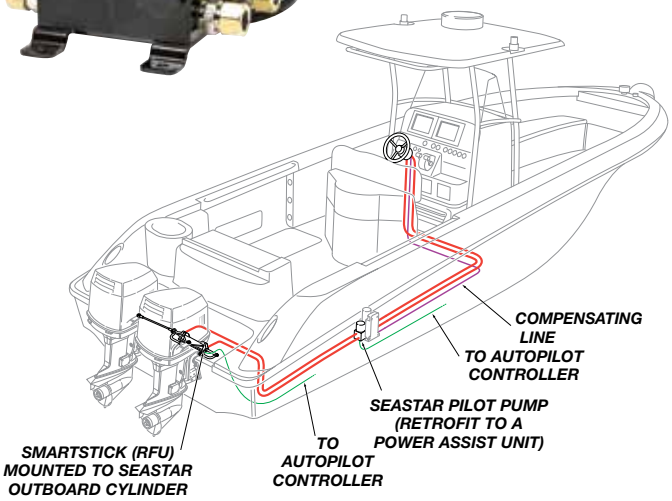

BLA Code	Description	Volts	Oil Compatibility	Weight kg	Weight lbs	Autopilot Pump Size (no-load)	Maximum Pressure psi	Cylinder Capacity
295040	Type 1 / AP1219	12	SeaStar Steering Fluid	2.2	4.9	60 in³/min	1000	4.9 in³ - 12.5 in³
295042	Type 2 / AP1233	12	SeaStar Steering Fluid	2.2	4.9	100 in³/min	1000	12.5 in³ - 21 in³
295044	Type 1 / AP2419	24	SeaStar Steering Fluid	2.2	4.9	60 in³/min	1000	4.9 in³ - 12.5 in³
295046	Type 2 / AP2433	24	SeaStar Steering Fluid	2.2	4.9	100 in³/min	1000	12.5 in³ - 21 in³

SeaStar® SmartStick

SmartStick is a non-contact autopilot position sensor that mounts to SeaStar Solutions® outboard front mount cylinders (**291003** and **291016***). The new SmartStick models replace the previous generation AR4102 and AR4202 models.

Features:

- Non-contact sensing – no moving parts to wear
- Convenient installation – no linkages or external parts to mount
- Electrical components sealed in potting – corrosion resistant

BLA Code	Description	Output
295035	Ray Marine Installations Only	2.2V - 2.8V
295034	Generic	0.5V - 4.5V

N.B. Will not suit Tournament cylinders

SeaStar® Filter Assembly

Suspended mount. 10 micron rating. 22.5L/min maximum capacity. Replace disposable cartridge every 250 hours. Plugged ⅛" NPT ports provided if pressure gauge is to be installed.

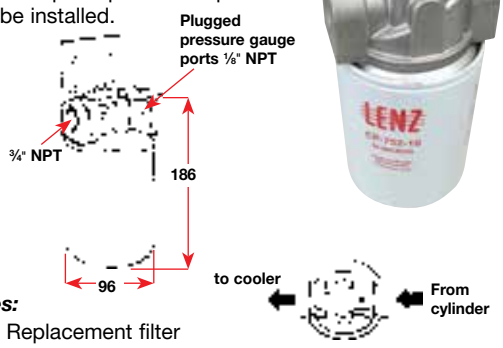

BLA Code
295090

Accessories:

295094 Replacement filter

N.B. Bracket not included

SeaStar® Reservoir

Bulkhead mounted, the oil reservoir allows easy system fill and assists with oil cooling. Features a system pressure gauge.

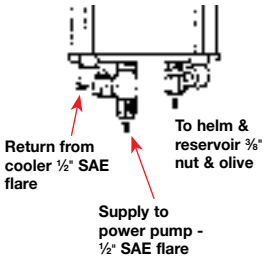

BLA Code	Volume L	Operating Pressure kpa
295070	4	200

SeaStar Solutions Helms

Nothing gets you closer to power steering!

The SeaStar® Helm Pump is an axial piston pump specifically designed for manual steering. Every load bearing point within the helm pump runs on either a roller or ball bearing race for super low friction, smooth, positive steering. It has a built-in lock valve to prevent the steering load from feeding back to the driver. The lock valve will not allow the rudder or drive unit to move until you apply load by turning the steering wheel. The lock valve section of the helm also includes a relief valve. This relief valve provides over pressure protection for mechanical components, hydraulic hoses and fittings.

1. Helm rotor supported by three roller bearings
2. Ball bearing piston race
3. Field replacement shaft seal
4. ¼" NPT ports
5. Built-in lock valve for positive rudder lock
6. Patented bleed tubes
7. Internal air pocket eliminates oil expansion overflow
8. Integral relief valve

BayStar™ Helm - Front Mount

- Satin black baked enamel finish over anodising
- Maximum steering wheel diameter is 660mm
- Small 76mm hole cut out in dash
- Available in two capacities
- Tilt helm option
- Convenient front of dash fill
- Complete with 2 elbow fittings, 2 nuts and olives

BLA Code	Description	Displacement		Relief Valve Setting	
		cc	cu in	bar	psi
291490	1.4 - front mount	22.9	1.4	70	1000

BayStar™ Helm - Tilt Mount

- Satin black baked enamel finish over anodising
- Maximum steering wheel diameter is 508mm
- 48° tilt range (12°-36°)
- Remote fill point included
- Complete with 2 elbow fittings, 2 nuts and olives

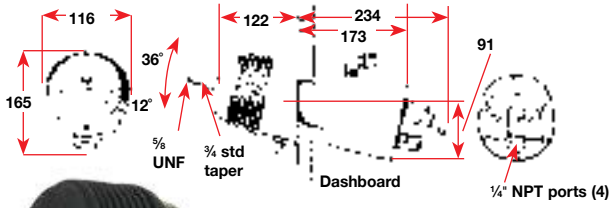

BLA Code	Description	Displacement		Relief Valve Setting	
		cc	cu in	bar	psi
291492	1.4 - tilt	22.9	1.4	70	1000

SeaStar® Helms - Front Mount

- Satin black baked enamel finish over anodising
- Maximum steering wheel diameter is 660mm
- Can be retro-fitted into old SeaStar® 115mm hole cut out (use **291908** mounting kit)
- Small 76mm hole cut out in dash
- Available in five capacities
- **291503** Commercial helm pump designed with heavy duty shaft seal and wiper
- Convenient front of dash fill
- Complete with 2 elbow fittings, 2 nuts and olives

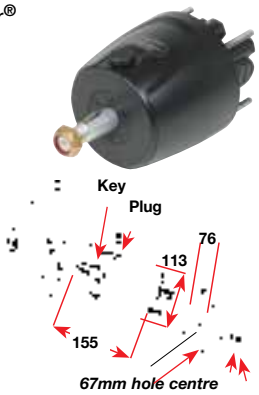

BLA Code	Description	Displacement		Relief Valve Setting	
		cc	cu in	bar	psi
291498	1.4 - front mount	22.9	1.4	70	1000
291502	1.7 - front mount	27.8	1.7	70	1000
291503	1.7 - front mount h/d	27.8	1.7	70	1000
291504	2.0 - front mount	32.8	2.0	70	1000
291506	2.4 - front mount	39.3	2.4	70	1000
291508	3.0 - front mount	49.2	3.0	70	1000

SeaStar® Pro Helm - Front Mount

- Unique lock valve provides instant steering response without loss of engine feel and comfort
- Small 76mm hole cut out in dash
- Can be retro-fitted into old SeaStar® 115mm hole cut out (use **291908** mounting kit)
- 33cc (2.0 cu/in) displacement
- Maximum steering wheel diameter is 660mm
- 103 bar (1500 psi) relief valve setting
- Convenient front of dash filling point
- Complete with elbow fittings
- Balanced hydraulic systems only

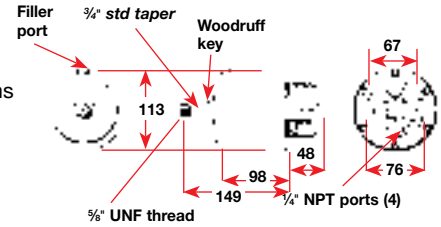

BLA Code	Description
291540	Pro helm 2.0 - front mount

Accessories:

291908	Back plate kit
291906	20° wedge

Helm - Rear Mount

- Behind dash mounting configuration
- Available in three capacities
- Maximum steering wheel diameter is 660mm
- Remote fill point included
- Complete with 2 elbow fittings, 2 nuts and olives

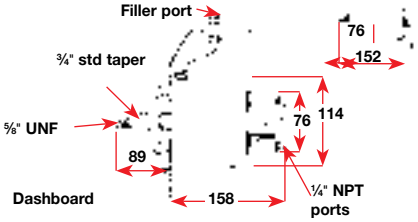

BLA Code	Description	Displacement		Relief Valve Setting	
		cc	cu in	bar	psi
291520	1.4 - rear mount	22.9	1.4	70	1000
291522	1.7 - rear mount	27.8	1.7	70	1000
291526	2.4 - rear mount	39.3	2.4	70	1000
291528	3.0 - rear mount	49.2	3.0	70	1000

SeaStar® Helms - Tilt

- Five wheel positions allow adjustment for most comfortable steering position
- Maximum steering wheel diameter is 508mm
- 48˚ tilt range (18˚ down - 30˚ up)
- Available in two capacities
- Convenient front of dash fill
- Complete with 2 elbow fittings, 2 nuts and olives

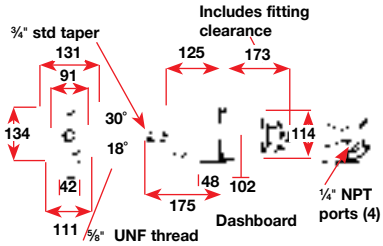

BLA Code	Description	Displacement		Relief Valve Setting	
		cc	cu in	bar	psi
291512	1.7 - tilt	27.8	1.7	70	1000
291516	2.4 - tilt	39.3	2.4	70	1000

SeaStar® Helm - Sport Tilt

- Five wheel positions allow adjustment for most comfortable steering position
- Maximum steering wheel diameter is 508mm
- 48˚ tilt range (12˚ - 36˚)
- Remote fill point included
- Complete with 2 elbow fittings, 2 nuts and olives

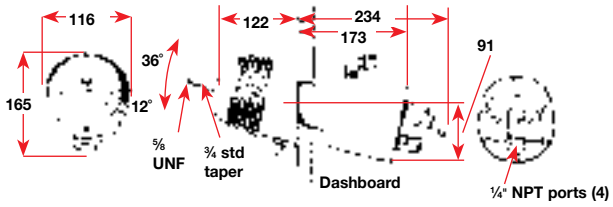

BLA Code	Description	Displacement		Relief Valve Setting	
		cc	cu in	bar	psi
291515	1.7 - sports tilt	27.8	1.7	70	1000

SeaStar® Helm - Pro Tilt

- Five wheel positions allow adjustment for most comfortable steering position
- 48° tilt range (18˚ down - 30˚ up)
- 103 bar (1500 psi) relief valve setting
- 33cc (2.0 cu/in) displacement
- Convenient front of dash filling point
- Complete with elbow fittings
- Maximum steering wheel diameter is 510mm
- Balanced hydraulic systems only

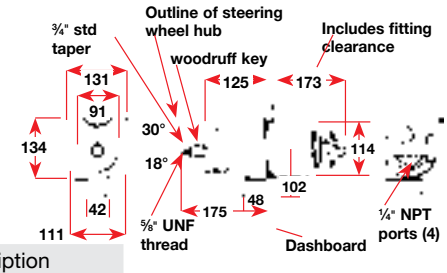

BLA Code	Description
291542	Pro helm 2.0 - tilt

SeaStar Back Plate Kit

Square bezel to suit SeaStar® or SeaStar® Pro front mount helms. Reduces the distance the helm protrudes by thickness of dash. Also used to retro-fit new helms into old style 115mm hole cut outs or into mechanical cut outs. See table below.

Helm Model Type	System	Back Plate Kit Required
Safe-T	Mechanical	Yes
Big-T	Mechanical	Yes
SeaStar Solutions® Rotary	Mechanical	No
SeaStar Solutions® Rack & Pinion	Mechanical	No
Syten	Hydraulic	Yes
Morse Rotary	Mechanical	No
Morse Rack & Pinion	Mechanical	No

BLA Code
291908

SeaStar Recessed Mount Kits

Round recessed mounting kits to suit either the BayStar™ or SeaStar® front mount helms. Designed to reduce the distance that the helm protrudes from the dash. Supplied with mount hardware.

291912

291913

BLA Code	Suits
291912	BayStar™
291913	SeaStar®

SeaStar 20º Wedge Mount Kit

This kit is designed to install SeaStar® and SeaStar® Pro front mount helms at a 20º angle to the mounting surface. Four possible mounting configurations are available.

Features:

- Cast alloy construction
- Black powder coated
- 8mm (5/16") mount holes
- Supplied with corrosion resistant mount fastenings

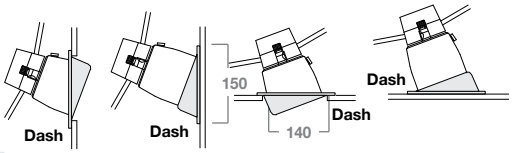

BLA Code
291906

SeaStar Filler Kit

Provides simple no-spill visible filling and purging of SeaStar® helms. Contains a clear piece of hose fitted with a cap one end to screw directly on to a one litre oil container, a ⅜" NPT hose tail to screw into the helm and a push pin to start oil flow. Just attach, invert oil bottle and pierce base of oil container to start the flow.

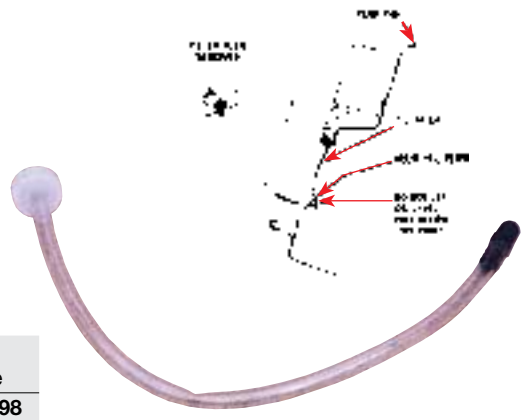

BLA Code
291898

SeaStar Filler Plugs

Vented filler plugs are supplied as standard with all SeaStar® helms (not capilano). They suit single station installations and the top station in twin station installations. Non-vented filler plugs are required for the lower station of twin station installations.

291916

291914

BLA Code	Description
291914	Non-vented filler plug
291916	Vented filler plug

SeaStar Hydraulic Oil

SeaStar Solutions® hydraulic steering systems require the use of ten grade aviation quality hydraulic fluid. This fluid is available in one litre bottles or 20 litre drums.

291904

291902

BLA Code	Size Litre
291902	1
291904	20

DANGEROUS GOODS

Caution:
Substitution of other than SeaStar Solutions® hydraulic oil may result in heavier steering and/or irreparable damage to your steering system.

SeaStar® Power Purge Jr

The Sea Star Power Purge Jr is a portable 12vdc automatic purging system for BayStar, Hydraulic and SeaStar hydraulic steering systems. The Power Purge Jr reduces the bleeding process to approximately 10 minutes. Supplied with quick connect fittings and hoses to suit a single cylinder installation with the option of purchasing a kit to suit twin cylinder installations.

An integral screen filter helps erase oil contamination out of the system.

291899

291900

BLA Code	Description
291900	Power Purge Jr
291897	Power Purge helm end fitting
291899	Twin Cylinder Kit

BayStar™ Cylinder Capacities

BAYSTAR™

291071

291072

BLA Code	SeaStar Solutions® Part No	Cylinder Model	Bore in	Bore mm	Shaft Dia. in	Shaft Dia. mm	Stroke in	Stroke mm	Volume in	Volume mm	Torque in-lb	Torque kg-mm
291071	HC4645H	Front Mount	1.25	31.7	.625	15.9	8	203	118.6	7.2	N/A	N/A
291072	HC4670H	Side Mount R/S Side Mount P/S	1.25	31.7	.50	12.7	8	203	135.2 160.8	8.3 9.8	N/A	N/A
291073	HC4647H	Front Mount	1.25	31.7	.625	15.9	8	203	118.6	7.2	N/A	N/A
291074	HC4648H	Front Mount	1.25	31.7	.625	15.9	8	203	118.6	7.2	N/A	N/A
291075	HC4658H	Front Mount	1.25	31.7	.625	15.9	8	203	118.6	7.2	N/A	N/A
291077	HC4460H	Inboard ATM	1.25	31.7	.50	12.7	6.25	159	105	6.4	4513	52

SeaStar® Cylinder Capacities

SEASTAR™

291003

291060

BLA Code	SeaStar Solutions® Part No	Cylinder Model	Bore in	Bore mm	Shaft Dia. in	Shaft Dia. mm	Stroke in	Stroke mm	Volume cc	Volume in3	Torque in-lb	Torque kg-mm
291003	HC5345	Front Mount	1.375	34.9	.75	19.0	8	203	135.5	8.2	N/A	N/A
291006	HC5343	Catamaran	1.283	32.6	.75	19.0	10	254	128.0	7.8	N/A	N/A
291008	HC5380	Splashwell R/S Splashwell P/S	1.25	31.7	.50	12.7	9	228	152.1 180.9	9.3 11.0	N/A N/A	N/A N/A
291010	HC5370	Side Mount R/S Side Mount P/S	1.25	31.7	.50	12.7	8	203	135.2 160.8	8.3 9.8	N/A N/A	N/A N/A
291012	HC5348	Front Mount	1.375	34.9	.75	19.0	8	203	134.5	8.2	N/A	N/A
291014	HC5347	Front Mount	1.375	34.9	.75	19.0	8	203	134.5	8.2	N/A	N/A
291016	HC5358	Front Mount	1.375	34.9	.75	19.0	8	203	134.5	8.2	N/A	N/A
291017	HC6345	Front Mount	1.375	34.9	.75	19.0	8	203	134.5	8.2	N/A	N/A
291018	HC6345	Front Mount Pro	1.375	34.9	.75	19.0	8	203	134.5	8.2	N/A	N/A
291020	HC6358	Front Mount Pro	1.375	34.9	.75	19.0	8	203	134.5	8.2	N/A	N/A
291022	HC5329	125-8VEM R/S 125-8VEM P/S	1.25	31.7	.50	12.7	8	203	135.2 160.9	8.3 9.8	7142 8505	82.3 98.0
291024	HC5330	BA125-EMV	1.25	31.7	.50	12.7	8	203	135.2	8.3	7142	82.3
291026	HC5328	125-8EM R/S 125-8EM P/S	1.25	31.7	.50	12.7	8	203	135.2 160.9	8.3 9.8	7142 8505	82.3 98.0
291028	HC5331	92VPS R/S 125-8EM P/S	1.25	31.7	.50	12.7	8	203	135.2 160.9	8.3 9.8	7142 8505	82.3 98.0
291029	HC5332	BA135-7EM	1.375	34.9	.625	15.9	7	178	135.2	8.3	5741	66.1
291030	HC5326	BA150-7Em	1.50	38.1	.625	15.9	7	178	167.5	10.2	8853	102.0
291060	HC5312	BA125-7ATM	1.25	31.7	.50	12.7	7	178	118.2	7.2	5025	57.9
291062	HC5313	BA135-7ATM	1.375	34.9	.625	15.9	7	178	135.2	8.3	5741	66.1
291064	HC5314	BA150-7ATM	1.50	38.1	.625	15.9	7	178	167.5	10.2	7117	82.0
291066	HC5318	BA150-7TM	1.50	38.1	6.25	15.9	7	178	167.5	10.2	7117	82.0
291068	HC5319	BA175-7TM	1.75	44.4	.75	19.0	7	178	225.4	13.7	9569	110.2
291076	HC5303	BA125-3ATM	1.25	31.7	.50	12.7	3	76	51.0	3.1	2688	30.9

Capilano Cylinder Capacities

CAPILANO™

294032

BLA Code	SeaStar Solutions® Part No	Cylinder Model	Bore in	Bore mm	Shaft Dia. in	Shaft Dia. mm	Stroke in	Stroke mm	Volume cc	Volume in3	Torque in-lb	Torque kg-mm
294032	HC5349	BA150-7TMB	1.5	36.1	.625	15.9	7	178	167.5	10.2	7117	82.07
294034	HC5350	BA175-7TMB	1.75	44.4	.75	19	7	178	225.4	13.7	9589	110.2
294036	HC5351	BA2000-7TMB	2.00	50.8	.75	19	7	178	310.0	16.9	13200	151.0
294038	HC5357	BA200-7TMC	2.00	50.8	.75	19	7	178	310.0	16.9	13200	151.0

Add a Station/Pilot Kit

Fitting kit to add a second station or autopilot using outboard or pro hoses.

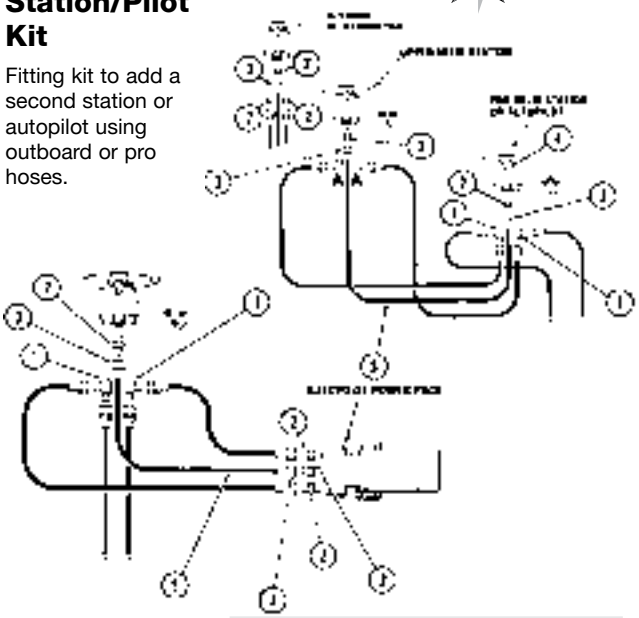

Item No.	Description	Qty Per Kit
1	Tee fitting 2 ends - 3/8" tube (external) 1 end - 1/4" NPT (external)	2
2	Connector fitting 3/8" tube (external) 1/4" NPT (external)	4
3	Tube nut & olive - 3/8" Ø	4
4	Non-vented filler plug	1
5	Nylon semi rigid tube - 3/8" OD	7.5m
A*	Elbow 3/8" tube (ext.), 1/4" NPT (ext.)	2

** Supplied with helm*

BLA Code
293602

Hose Kit For SeaStar® Cylinders - 3/8"

Fitting kit to connect 3/8" diameter copper tubing to SeaStar® cylinders.

Item No.	Description	Qty Per Kit
1	Tube nut 3/8" Ø	2
2	Connector 3/8" tube (ext.)	2
3	450mm hoses with fittings	2

BLA Code
293202

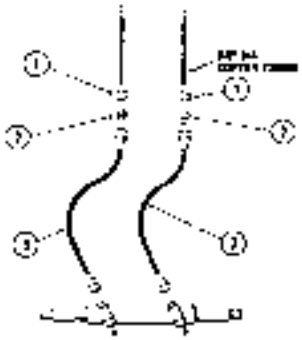

Hose Kit For SeaStar® Cylinders - 1/2"

Fitting kit to connect 1/2" diameter copper tubing to SeaStar® cylinders.

Item No.	Description	Qty Per Kit
1	450mm hoses with fittings	2
2	Connector 3/8" NPT (int.) 3/8" tube (ext.)	2
3	Connector 3/8" NPT (ext.) 1/2" SAE flare	2
4	Tube nut 1/2"" SAE flare	2

BLA Code
293204

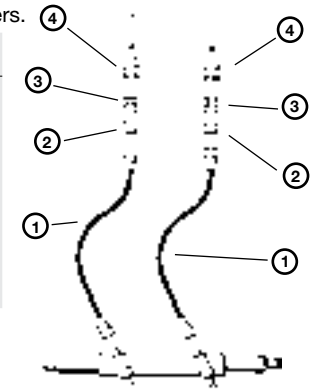

Add a Station/Pilot Kit

Fitting kit to add a second station or autopilot using 3/8" copper or nylon semi rigid tubing (not included).

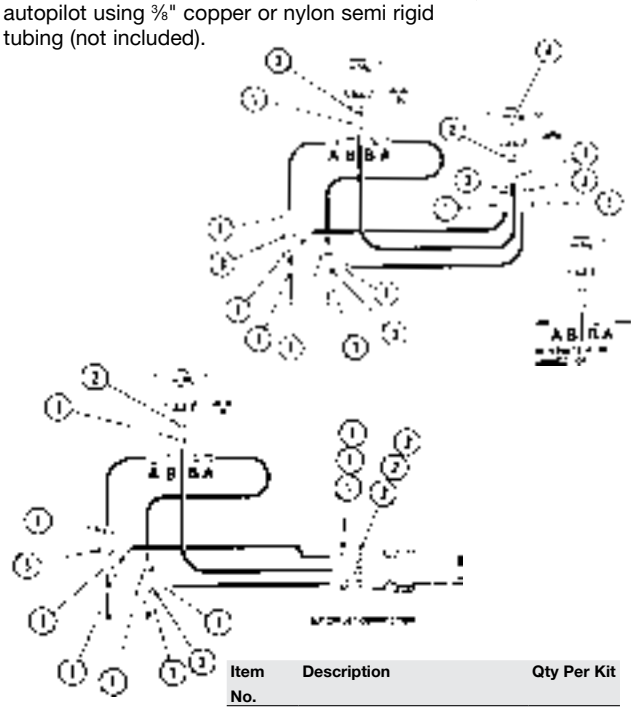

Item No.	Description	Qty Per Kit
1	Tube nut & olive - 3/8" Ø	10
2	Connector fitting 3/8" tube (external) 1/4" NPT (external)	4
3	Tee fitting 3 ends - 3/8" tube	2
4	Non-vented filler plug	1
A*	Tube nut & olive - 3/8" Ø	2
B*	Elbow 3/8" tube (ext.), 1/4" NPT (ext.)	2

** Supplied with helm*

BLA Code
293604

SeaStar Solutions Fittings and Kits

Fittings

All SeaStar Manual Hydraulic steering systems utilise the same style of fittings for all applications. These are 9.5mm (3/8") compression fittings which utilise a 14.3mm (9/16") - 24 extra fine thread.

ORB Fittings

These fittings are made of corrosion resistant stainless steel and now thread into the cylinders/helms via Positionable O-ring hose ports. Fittings can be easily orientated in any direction to accommodate tube routing.

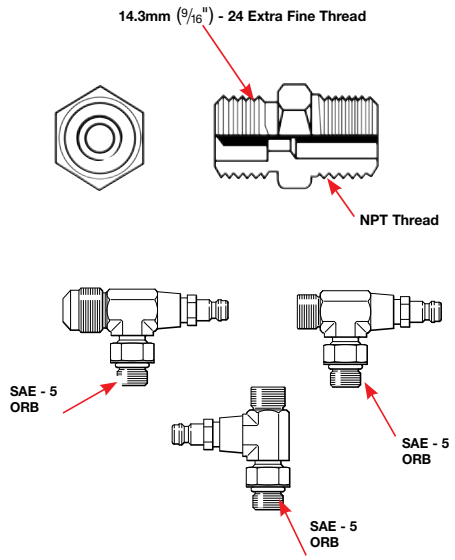

Tube Nut & Olive - Brass

Contains one nut and one olive.

BLA Code	Tube Thread	Tube Size
293609	⅜"	⅜"
293610	⅜"	⅜"
293611	½"	½"

Union Coupling Fittings - Brass

Contains 2 nuts, 2 olives and 1 union.

BLA Code	Description
293612	⅜" tube to ⅜" tube
293613	⅜" tube to ½" tube

Elbow Fittings - Brass

Sold individually complete with nut and olive.

BLA Code	Description
293615	¼" NPT to ⅜" tube thread
293617	¼" NPT to ½" tube thread

Connector Fittings - Brass

Brass. Sold individually complete with tube nut and olive.

BLA Code	Description
293614	¼" NPT to ⅜" tube thread
293625	¼" NPT to ½" tube thread

Elbow Fittings - Chromed Brass

90° chromed brass elbow fittings. Sold individually.

BLA Code	Description
293616	¼" NPT female - ⅜" tube
298466	¼" NPT male - ⅜" tube

Elbow Fittings - Chromed Brass

45° chromed brass elbow fittings. Sold as a pair.

BLA Code
293607

Tee Fittings - Brass

Sold individually complete with tube nuts and olives.

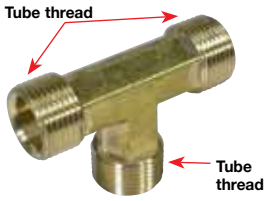

BLA Code	Description
298566	⅜" tube thread
293623	½" tube thread

Tee Fittings - Brass

Sold individually complete with tube nuts and olives.

BLA Code	Description
293618	¼" NPT to ⅜" tube
293619	¼" NPT to ½" tube

Tee Fittings - Brass

Sold individually complete with tube nuts and olives.

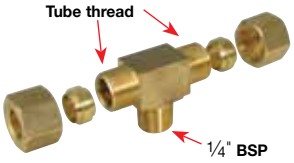

BLA Code	Description
293621	¼" BSP to ⅜" tube
293629	¼" BSP to ½" tube

Bleeder Nipple

Suits **291003** front mount pivot cylinder. Two per kit.

BLA Code
293624

Horizontal Bleeder Tee - Brass

Two per kit.

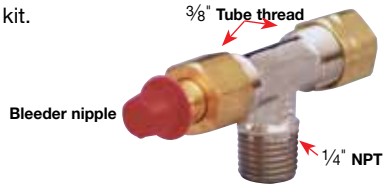

BLA Code	Description
293622	¼" NPT to ⅜" tube
293636	¼" NPT to ½" tube
293638	Vertical Bleeder ¼" NPT to ⅜" tube

Bulkhead Fitting Kit

Used to connect hydraulic lines and hoses through a bulkhead or splashwell up to 20mm thick. Two per kit. Brass construction.

Item No.	Description	Qty Per Kit
1	Bulkhead fitting - short ⅜" tube (ext.)	4
2	Elbow ⅜" tube (ext.) ¼" NPT (int.)	2
3	Washer	4
4	Nut	2

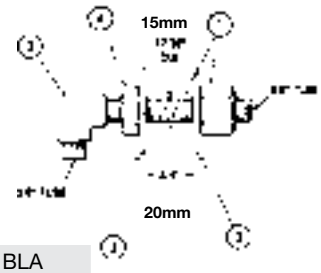

BLA Code
293630

Connector Fitting

Adaptor for connection of ½" copper or nylon semi rigid tubing to seastar cylinder ⅜" tube thread. Brass.
Sold individually.

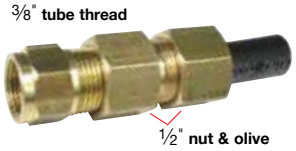

BLA Code	Description
292993	Female connector 1½" tube to ⅜" BSP
292994	Male connector ⅜" tube to ⅜" BSP
293626	Complete connector fitting ⅜" tube to ½" tube

ORB Straight Fittings - HF6609

- 2 per kit

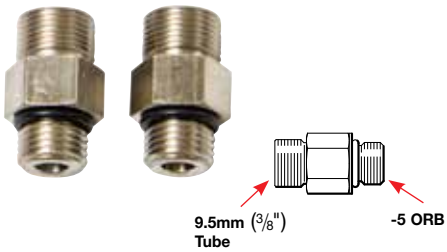

BLA Code
293644

ORB Tee Fittings - HF6006

- 2 per kit

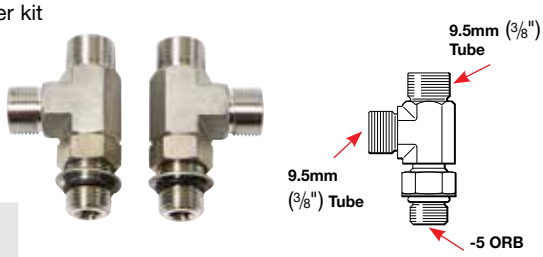

BLA Code
293642

ORB Elbow Fittings - HF6004

- 2 per kit

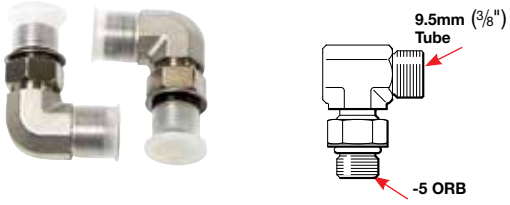

BLA Code
298467

ORB 45" Fittings - HF6011

- 2 per kit

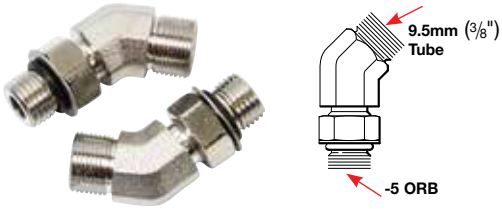

BLA Code
293606

ORB Tee Fittings - HF6605

- 2 per kit

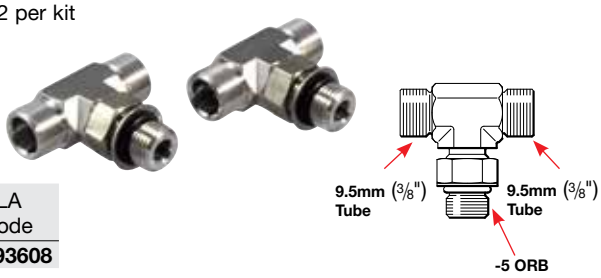

BLA Code
293608

Synchronisation Valve

Used to align fluid linked twin cylinders and aid bleeding. **293632** and **293635** are supplied with four nuts and olives.

BLA Code	Description
293632	Suits ⅜" tubing, outboard & pro hose
293633	Suits ⅜" SAE flare fittings
293634	Valve alignment ⅜" tubing HA5471-2
293635	Suits ½" tubing, outboard & pro hose
293621	Tee fitting suit **293632** - ⅜" tube to ¼" BSP
293629	Tee fitting suit **293635** - ½" tube to ¼" BSP
294127	Brass tee ⅜" SAE

5 ORB - HF6012 (M) 1/4NPT (F)

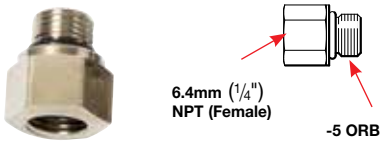

BLA Code
293601

ORB Horizontal Bleeder Tee - HF6002

- 2 per kit

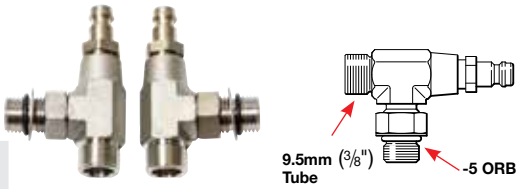

BLA Code
293646

ORB KIT Twin Station Nylon Hose - HF6010

BLA Code
293605

ORB Fitting Kit and AutoPilot - HF6007

BLA Code
293603

SeaStar Thru Bulkhead Hose - Outboard or Pro

SEASTAR

Ready made quick fit hydraulic hoses with thru bulkhead fittings installed. Suits SeaStar® outboard, sterndrive and inboard applications. Provides professional finish to hydraulic installations, as well as providing kink and abrasion protection to the hose where it passes through the splashwell (or bulkhead) on the boat. Supplied complete with two brass swaged fittings (⅜" tube thread), thru bulkhead fitting as well as rubber boots to prevent hose kinking at the cylinder end. Available in Outboard Hose (with a 70 bar (1000 psi) working pressure rating), or Kevlar® reinforced Pro Hose with a 103 bar (1500 psi) working pressure rating. Pro Helm installations require Pro Hoses. Sold individually.

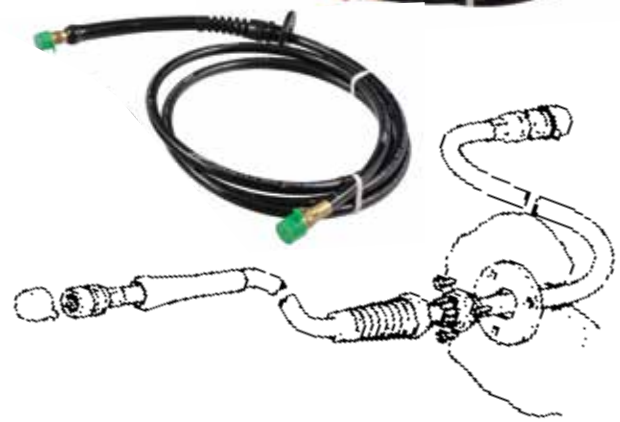

Outboard thru bulkhead hoses

BLA Code	Size Length ft	BLA Code	Size Length ft
293303	3	**293317**	17
293305	5	**293318**	18
293306	6	**293319**	19
293307	7	**293320**	20
293310	10	**293321**	21
293311	11	**293322**	22
293312	12	**293323**	23
293313	13	**293324**	24
293314	14	**293326**	26
293315	15	**293328**	28
293316	16	**293335**	35

Pro thru bulkhead hoses

BLA Code	Size Length ft
293410	10
293411	11
293412	12
293413	13
293414	14
293415	15
293416	16
293417	17
293418	18
293419	19
293420	20
293424	24

SeaStar Nylon Semi Rigid Tube

SEASTAR

⅜" outside diameter nylon semi rigid tubing is available for use with inboard, stern drive and outboard installations when used in conjunction with SeaStar® 1.7 and Morse H52 helms. ½" outside diameter nylon semi rigid tubing is available for plumbing runs in excess of 30 metres on inboard and stern drive installations. ½" tubing is suitable for use with SeaStar® 1.7, 2.0 and 2.4 helms as well as Morse 50 series helms. Both ⅜" and ½" tubing have a working pressure rating of 70 bar (1000 psi). ⅜" tubing requires a **293610** nut and olive kit to connect tubing to each port of the cylinder. ½" tubing requires a **293626** connector fitting for connection to each port of the cylinder, helm or autopilot.

BLA Code	Length m	Length ft	Diameter in
292990	15	50	1/2
292992	30	100	1/2
292997	15	50	3/8
292998	30	100	3/8

N.B. Use of semi rigid tubing in exposed outboard applications voids manufacturers warranty

SeaStar Copper Tubing

SEASTAR

Copper tubing is recommended for inboard installations in conjunction with SeaStar® 2.4, 1.7 and 2.0 helms when the tubing run exceeds 30 metres. SeaStar® steering systems installed with copper tubing require short lengths of flexible hose to accommodate slight cylinder movement. Hoses to suit ⅜" copper pipe are supplied in kit form (**293204**), containing one pair of outboard hoses 450mm long with ⅜" diameter tube fittings on both ends and come complete with two ⅜" diameter tube nuts and connector fittings. ⅜" copper tubing should be obtained through a local vendor based on the following tubing specifications.

Specifications for copper tubing:

Annealed copper refrigeration tubing 0.032" wall thickness, ⅜" outside diameter.

SeaStar Standard Outboard Hose

SEASTAR

For use in conjunction with outboards, stern drives and inboards with 1.7, 2.0 and 2.4 helms. 70 bar (1000 psi) maximum working pressure. High abrasion resistance with unbelievable flexibility and strength. Reinforced PVC construction. Large internal diameter makes the steering lighter and more responsive. The ⅜" tube thread swage fittings on each end eliminate the chance of connector failure. The cylinder end swage fittings have rubber boots fitted to prevent kinking and protect the connectors from the environment. Available from 600mm (2ft) to 12m (40ft) in 305mm (1ft) increments. Sold individually.

BLA Code
2930XX

N.B. The last two digits being length in feet. i.e. 293120 = 20 feet long

SeaStar Pro Hose

SEASTAR

A premium grade hose recommended for use with SeaStar® Pro helms but can be used in other installations, particularly when larger volume pumps are being used. Pro hose has a 103 bar (1500 psi) maximum working pressure with Kevlar® reinforcement that reduces volumetric expansion to less than half that of regular hoses. This achieves improved response and reduces engine flutter on high speed applications of 60 knots plus. Reduces prevailing supercharging pressure in SeaStar® Pro systems. Fitted with ⅜" tube thread swage fittings on both ends. The swage fittings have rubber boots fitted at cylinder end to prevent kinking and protect the connectors from the environment. Available from 600mm (2ft) to 12m (40ft) in 305mm (1ft) increments. Sold individually.

BLA Code
2931XX

N.B. The last two digits being length in feet. i.e. 293120 = 20 feet long

SeaStar Re-usable Hose Fitting

Brass hose fitting, suitable for use with outboard or Pro SeaStar® branded hose. Sold individually.

BLA Code
297332

SeaStar Spacer Kit

Includes a selection of spacers, washer and bolt to enable the **291003** front mount pivot cylinder to fit different outboard brands and models.

BLA Code
293690

SeaStar Alloy Trunnion Mount

Suits **291060**, **291062** and **291064** cylinders.

BLA Code
293650

SeaStar Bolt Replacement - HA5822

High tensile stainless steel ⅜" NF nylock nut and ⅜" x 1-¼" hex head bolt to suit Yamaha® 350.

BLA Code
293692

SeaStar Slide Kit

Slide kit to suit **291002** old front mount cylinder.

293700 INCLUSIONS

Item No.	Description	Qty Per Kit
3	Nut ⅜" NF nyloc	1
4	Notched washer	1
5	Slide washer	2
6	Slide follower	1
7	Follower bush	1
8	Bottom washer (3 hole)	1
9	Countersunk washer	1
10	Screw ⅜"x 1⅝"" C/S head	1

BLA Code	Description
293700	Complete kit

SeaStar Shaft Seal Cover

- Heavy Duty

Designed with commercial operators in mind. The anodised alloy cover provides physical protection to the main shaft seal. The incorporated preliminary shaft seal and 'O' ring seal prevents harsh contaminants from attacking the main shaft seal. Suits all SeaStar® front mount hydraulic helms.

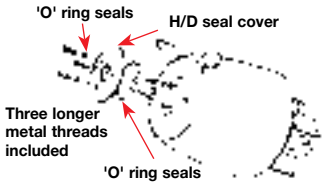

BLA Code	Description
293743	Helm Shaft Seal Cover HA5446
293755	Seal Gland to suit SeaStar cylinders
293757	Seal Gland to suit Tournament II cylinder

SeaStar Hydraulic Steering Lock

Steer Stop™ is a simple yet effective method of preventing damage to engine hydraulic steering systems while being trailed. By not allowing the ram to move when the boat is being transported the Steer Stop™ prevents the engine from wind veining and wandering while keeping the engine locked in the forward facing position, helping reduce damage to motor supports and steering systems.

Manufactured from tough PVC and designed to be simply clipped over each side of the hydraulic steering rams, these heavy duty stops are held in place by the virtue of their strong gripping power. Each pair is connected by cord which helps removal and keeps them together when stored.

Ideally suited for use with cylinders using a ram of 19mm diameter or more, such as the SeaStar® front mount range of rams. Sold as a pair in clear bright hang sell packaging.

Features:

- Locks hydraulic steering system when trailing
- Prevents damage to steering system and supports
- Keeps engine locked in straight forward position
- Heavy duty construction

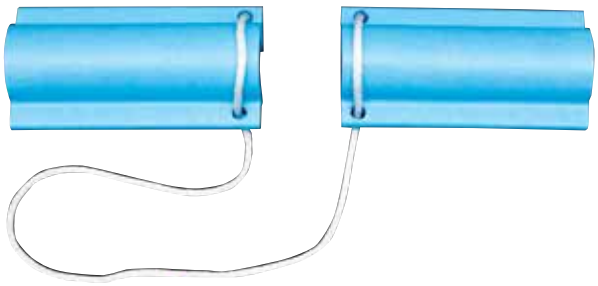

BLA Code	Length mm	Width mm	Minimum Ram Dia. mm
293780	102	55	19

293780 Installed

BayStar™ Hydraulic Service Kits

BAYSTAR™

BLA Code	SeaStar Solutions® Part No.	Description
293738	HS5147	Seal kit to suit HH4016 (**291500**) and HH4015 (**291501**) helms
293742	HS5176	Seal kit to suit HH4514 (**291490**) and HH4513 (**291492**) helms
293745	HS5161	Seal kit to suit HH5217 (**291503**) helm
293716	HS5153	Seal kit to suit HC4670H (**291072**) cylinder
293713	HP4600	Seal kit to suit HC4645H (**291071**), HC4647H (**291073**), HC4648H (**291074**) & HC4658H (**291075**) cylinders
293720	HS5154	Seal kit to suit HC4460H (**291077**) cylinder
293718	HP5607	Port side seal kit to suit HC4600H (**291070**) obsolete cylinder
293719	HP5608	Starboard seal kit to suit HC4600H (**291070**) obsolete cylinder
293631	HF4202	Bleed 'T' for BayStar™ cylinder (pk 2)

SeaStar® Hydraulic Service Kits & Parts

SEASTAR™

BLA Code	SeaStar Solutions® Part No.	Description
293740	HS5151	Seal kit to suit all SeaStar 1.7 and 2.4 helm pumps manufactured from 1984 thru to 1989 Seal kit containing quad seal, keyway, helm nut and mount nuts for current BayStar™ and SeaStar® helms, including: **291490, 291492, 291502, 291504, 291506, 291512, 291515, 291516, 291522, 291526, 291540** and **291542**.
293741	HP6032	Helm seal front mount service kit for use all Baystar & Seastar helms except HH4016 (**291500**), HH4015 (**291501**), HH5217-3 (**291503**)
293742	HS5176	Seal kit to suit HH5271 (**291502**), HH5273 (**291504**), HH5272 (**291506**), HH5741 (**291512**), HH5291 (**291515**), HH5742 (**291516**), HH5261 (**291522**), HH5262 (**291526**), HH5770 (**291540**) and HH5774 (**291542**) helms
293712	HS5152	Seal kit to suit HC5340 obsolete cylinder with snap-in end fittings
293714	HS5157	Seal kit to suit HC5345 (**291003**), HC5347 (**291014**), HC5348 (**291012**) and HC5358 (**291016**). It is also the replacement seal kit for HC5342 and HC5365 obsolete cylinders with screw in fittings. Includes tools.
293715	HS5167	Seal kit to suit HC5345 (**291003**), HC5347 (**291014**), HC5348 (**291012**) and HC5358 (**291016**). It is also the replacement seal kit for HC5342 and HC5365 obsolete cylinders with screw in fittings. Excludes tools.
293716	HS5153	Seal kit to suit HC5370 (**291010**) cylinder
293720	HS5154 HC5329	Seal kit to suit HC5380 (**291008**), HC5303 (**291076**), HC5312 (**291060**), HC5328 (**291026**), (**291022**), HC5330 (**291024**) and HC5331 (**291028**) cylinders
293722	HS5155	Seal kit to suit HC5313 (**291062**) and HC5332 (**291029**) cylinders
293724	HS5156	Seal kit to suit HC5314 (**291064**) and HC5326 (**291030**) cylinders
293726	HS5182	Seal kit to suit HC5318 (**291066**) cylinder
293728	HS5183	Seal kit to suit HC5319 (**291068**) cylinder
293766	HP6018	Replacement "Bull horn" support brackets (pk 2) to suit HC5345 (**291003**), HC5347 (**291014**), HC5348 (**291012**) and HC5358 (**291016**)
293770	HP6016	Replacement support rod to suit HC5340, HC5342, HC5345 (**291003**), HC5347 (**291014**), HC5348 **291012**), HC5358 (**291016**), HC6345 (**291018**) and HC6358 (**291020**)

Capilano Hydraulic Service Kits

CAPILANO™

BLA Code	SeaStar Solutions® Part No.	Description
293726	HS5182	Seal kit to suit HC5349 (**294032**) cylinder
293728	HS5183	Seal kit to suit HC5350 (**294034**) cylinder
293730	HS5184	Seal kit to suit HC5351 (**294036**) and HC5357 (**294038**) cylinders
293732	HS5185	Seal kit to suit HC5375, HC5379
297100	KS-19	Seal kit to suit K-6 Cylinders
298382	KS-02	Seal kit to suit K-18, K-19, K-20 Cylinders
298386	KS-14	Seal kit to suit K-51 Cylinder
298520	HS-05	Seal kit 50 Series Helm
298522	HS-02	Seal kit to suit H-20 and H-30 Helm (79 to date)

Power Steering Hydraulics Service Kits

BLA Code	SeaStar Solutions® Part No.	Description
293751	HS5197	Seal kit to suit HC5801 and HC5803 servo cylinders. This is the small servo cylinder mounted on the side of the HC5801 (**295002**) and HC5803 (**295004**) cylinders
293752	HS5198	Seal kit to suit HC5801 (**295002**), HC5803 (**295004**), HC5802 (**295006**) and HC5804 (**295008**) large primary cylinders
293753	HS5196	Seal kit to suit servo valve block located on HC5801 (**295002**) and HC5803 (**295004**) cylinders

Hydraulic Plumbing Diagrams

SEASTAR SOLUTIONS
SEASTAR™

Single Helm, Single Cylinder

This plumbing configuration is suitable for side mount, splashwell, tandem catamaran, stern drive and inboard installation.

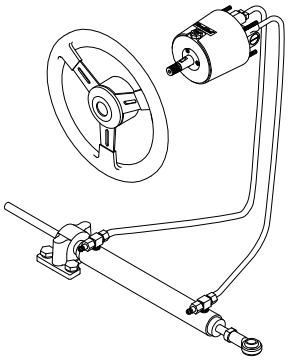

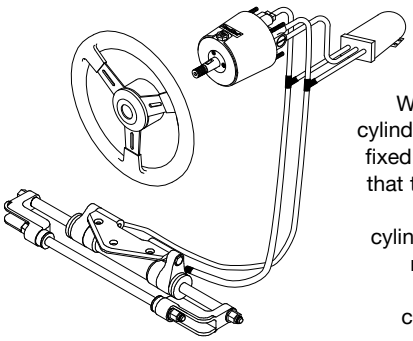

With a front mount cylinder the pushrod is fixed, it is the cylinder that travels. Plumbing of front mount cylinders requires the reverse plumbing connection to conventional fixed cylinder mount.

Dual Station, Single Cylinder

Typical for side mount, splashwell mount, tandem catamaran, stern drive and inboard installations.

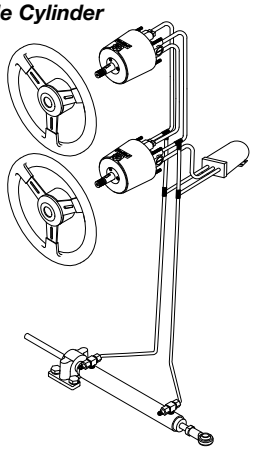

Front mount installations only

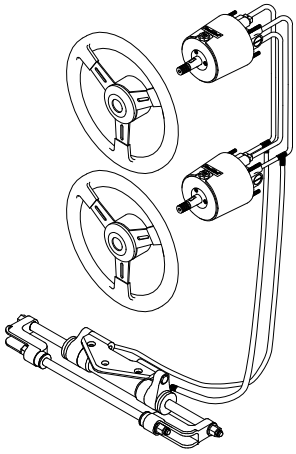

Dual Station, Dual Cylinder

This plumbing configuration fluid links the cylinders. Opening of ball valve enables engine alignment. Systems can be plumbed with one ball valve but purging of cylinder connecting line can be difficult. Twin cylinder fluid linked systems have the same number of wheel turns and torque as single cylinder systems.

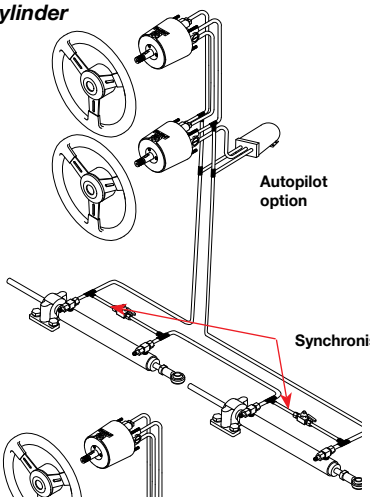

Fluid link front mount cylinders. This plumbing configuration is rated to 450HP non-counter rotating and 600HP for counter rotating outboards. Twin ball valves are recommended for ease of bleeding. SeaStar's syncro valve **293632** (one only), refer page 818 for details.

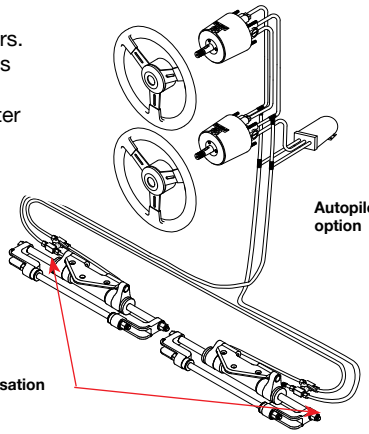

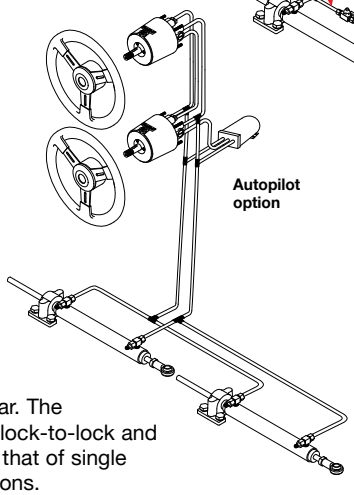

This plumbing configuration requires the installation of a mechanical tie bar. The number of turns lock-to-lock and torque is double that of single cylinder installations.
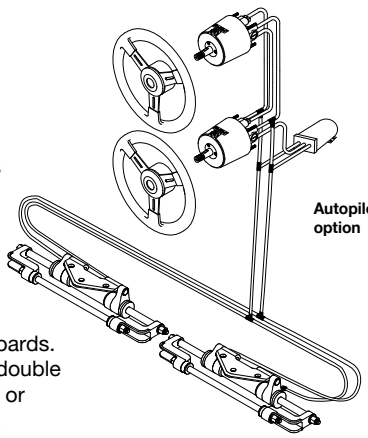
This plumbing configuration requires the installation of a mechanical tie bar. Rated to 450HP for non-counter rotating outboards and 600HP for counter rotating outboards. Turns lock-to-lock is double that of single cylinder or twin cylinder fluid link systems.